MECHANICAL SYMBOLS AND ABBREVIATIONS

SYMBOL	DESCRIPTION
CHS	CHILLED WATER SUPPLY
CHR	CHILLED WATER RETURN
G	NATURAL GAS
HWS	HEATING HOT WATER SUPPLY
HWR	HEATING HOT WATER RETURN
	ELBOW TURNING DOWN
	ELBOW TURNING UP
	GATE VALVE
	CHECK VALVE
	GLOBE VALVE
	BALANCING VALVE
	FLEXIBLE CONNECTION
	3-WAY CONTROL VALVE
	2-WAY CONTROL VALVE
	UNION CONNECTION
	FLANGE CONNECTION
FD	FIRE DAMPER
MOD	MOTORIZED DAMPER

SYMBOL	DESCRIPTION
MD	MANUAL DAMPER
	SUPPLY DUCT SECTION
	EXHAUST RETURN OR OUTSIDE AIR DUCT SECTION
12 mm	ROUND DUCT SIZE, MILLIMETERS
20X10	RECTANGULAR DUCT SIZE (FIRST DIM. IS SIDE VIEWED)
	ELBOW UP, (SUPPLY)
	ELBOW DOWN, (SUPPLY)
	ELBOW W/TURNING VANES
	FLEXIBLE CONNECTION
	THERMOMETER
	PRESSURE GAUGE
	DIRECTION OF FLOW
	Y STRAINER WITH BLOW-OFF VALVE
	PRESSURE RELIEF VALVE
	PRESSURE REGULATING/REDUCING VALVE
T	THERMOSTAT
F	FIRESTAT
	MANUAL AIR VENT
D1 200	SUPPLY DIFFUSER, TYPE D1, 200 L/s (REFER TO DIFFUSER SCHEDULE)
R1 200	RETURN OR EXHAUST REGISTER, TYPE R1, 200 L/s (REFER TO DIFFUSER SCHEDULE)

SYMBOL	DESCRIPTION
AFF	ABOVE FINISHED FLOOR
AHU	AIR HANDLING UNIT
AFMS	AIR FLOW MEASURING STATION
CHP	CHILLED WATER PUMP
°C	DEGREES CELSIUS
DB/WB	DRY BULB/WET BULB
DDC	DIRECT DIGITAL CONTROL
DHW	DOMESTIC HOT WATER
DHX	DOMESTIC HOT WATER HEAT EXCHANGER
EA	EXHAUST AIR
EAT	ENTERING AIR TEMPERATURE
EF	EXHAUST FAN
ESP	EXTERNAL STATIC PRESSURE
ER	EXHAUST REGISTER
ET	EXPANSION TANK
EWT	ENTERING WATER TEMPERATURE
FD	FIRE DAMPER
HWP	HOT WATER PUMP
KPa	KILOPASCALS (PRESSURE)
KW	KILOWATTS (HEAT FLOW RATE)
LAT	LEAVING AIR TEMPERATURE
LWT	LEAVING WATER TEMPERATURE
L/s	LITERS PER SECOND
MOD	MOTOR OPERATED DAMPER
MVD	MANUAL AIR VOLUME DAMPER
MER	MECHANICAL EQUIPMENT ROOM
MAX	MAXIMUM
MIN	MINIMUM
OA	OUTSIDE AIR
OBD	MANUAL VOLUME DAMPER
Pa	PASCALS (PRESSURE)
PD	PRESSURE DROP
PLTD	PLEATED
PRV	PRESSURE REDUCING VALVE
RA	RETURN AIR
RAR	RETURN AIR REGISTER
RD	RELIEF AIR DAMPER
RF	RELIEF FAN
RH	RELIEF HOOD
SA	SUPPLY AIR
TA	THROW AWAY
TEMP	TEMPERATURE
T'STAT	THERMOSTAT
UH	UNIT HEATER
VAV	VARIABLE AIR VOLUME
WC	WATER COLUMN
w.g.	WATER GAUGE

UNIT HEATER SCHEDULE

SYMBOL	CAPACITY KILOWATTS	AIR FLOW L/s	EAT °C	EWT °C	LWT °C	WATER FLOW L/sec	MOTOR WATTS	TYPE	LOCATION	REMARKS
UH-1	2.2 KW	155	10°	80°	63°	0.035	5	HORIZONTAL	RM. 145	T-STAT SET AT 10°C
UH-2	2.2 KW	155	10°	80°	63°	0.035	5	HORIZONTAL	RM. 113	T-STAT SET AT 10°C

HVAC PUMP SCHEDULE

SYMBOL	L/s	TOTAL HEAD kPa	FLUID TEMP °C	MAXIMUM WATTS	SERVICE (MIN) EFFICIENCY	TYPE	REMARKS
CWP-1	15.5	195	7° TO 93°	5500	40%	END SUCTION	
HWP-1	5.7	85	7° TO 93°	1100	40%	END SUCTION	

HVAC CHILLER SCHEDULE

SYMBOL	CAPACITY KW	L/s	ENT/LVG TEMP °C	OA TEMP °C	TYPE	REMARKS
CH-1	350	15.5	13.7°/7.0°	34	AIR-COOLED	30% ETHYLENE GLYCOL SOLUTION

HVAC BOILER SCHEDULE

SYMBOL	CAPACITY KW	L/s	ENT/LVG TEMP °C	STACK SIZE	SERVICE (MIN) EFFICIENCY	TYPE	REMARKS
BLR-1	175	5.7	71.1°/80.0°	350 mm	80%	FORCED-DRAFT, NAT GAS	

AIR HANDLING UNIT SCHEDULE

		AHU-1	AHU-2	MZ-1
FAN	SYMBOL	AHU-1	AHU-2	MZ-1
	SERVICE			
	LOCATION	KITCHEN	SERVERY	DINING
	SYSTEM TYPE	SINGLE ZONE	SINGLE ZONE	MULTI-ZONE
	TOTAL AIR VOLUME L/s	3350	2925	4065 *
	O.A. L/s	1660	900	2600
	TOTAL E.S.P.	750 Pa	780 Pa	920 Pa
	REMARKS			
COOLING COIL	TOTAL LOAD kW	66.8	91.0	157.5
	SENSIBLE LOAD kW	51.2	60.7	97.3
	EAT (DB/WB)	32.0/22.9	29.1/21.0	30.9/22.2
	LAT (DB/WB)	18.1/17.4	12.5/12.4	11.3/11.2
	EWT-LWT	7.0/12.6	7.0/12.6	7.0/12.6
	WATER FLOW L/s	3.3	4.5	7.7
	MAX. FACE VEL. m/s	2.7	2.7	2.7
HEATING COIL	TOTAL LOAD kW	80.8	69.8	89.0
	EAT	13.9	16.4	12.8
	LAT	32.9	35.8	30.6
	EWT-LWT	82.2/71.1	82.2/71.1	82.2/71.1
	WATER FLOW L/s	1.6	1.5	1.9
	MAX. FACE VEL.	3.7	3.3	3.1
PREHEAT COIL	TOTAL LOAD kW	NOT USED	NOT USED	31.0
	EAT	NOT USED	NOT USED	6.6
	LAT	NOT USED	NOT USED	12.8
	EWT-LWT	NOT USED	NOT USED	82.2/71.1
	WATER FLOW L/s	NOT USED	NOT USED	0.6
	MAX. FACE VEL.	NOT USED	NOT USED	2.8
FILTER	PRE-FILTER TYPE	50 mm TA	50 mm TA	50 mm TA
	MAX. FACE VEL. m/s	1.5	1.5	1.5
	PERCENT EFFICIENCY	25 TO 30%	25 TO 30%	25 TO 30%
	FINAL FILTER TYPE	H.P. **	H.P. **	H.P. **
	MAX. FACE VEL.	---	---	---
	MAX. P. D. CLEAN	100 Pa	100 Pa	100 Pa
	REMARKS			

* ZONE 1: EAST DINING AREA AIR FLOW = 1955 L/S
ZONE 2: WEST DINING AREA AIR FLOW = 1610 L/S
ZONE 3: CARRY-OUT AREA AIR FLOW = 500 L/S

** FINAL AIR FILTER SHALL BE HIGH PERFORMANCE (H.P.), EXTENDED AREA, RIGIDLY SUPPORTED, DISPOSABLE FILTER.

MAKE-UP AIR UNIT SCHEDULE

SYMBOL		MAU-1 & MAU-2	MAU-3 & MAU-4	MAU-5
FAN	TOTAL AIR L/s	3220	1330	660
	OUTSIDE AIR L/s	3220	1330	660
	EXTERNAL S.P. Pa	365	365	175
INDIRECT GAS FIRED HEATING SECTION	AIR FLOW, L/s	3220	1330	660
	ENTERING AIR D.B. °C	-7	-7	-7
	HEAT OUTPUT, kW	163.0	113.7	39.85
	GAS CONSUMPTION, kW	102.1	152.0	53.0
FILTER TYPE		35% EFF. DISPOSABLE	35% EFF. DISPOSABLE	35% EFF. DISPOSABLE
MIN FAN kW		3.7	1.1	0.5
ELECTRICAL		208V/3 PHASE	208V/3 PHASE	208V/3 PHASE
REMARKS		SEE NOTES	SEE NOTES	SEE NOTES

NOTES

1. STAINLESS STEEL HEAT EXCHANGERS SHALL BE USED IN THE INDIRECT HEATING SECTION.
2. GAS CONNECTIONS SHALL BE INTERNAL TO THE UNIT.

TABLE I

PIPE, VALVES AND FITTINGS IP AND METRIC DESIGNATIONS

NOMINAL PIPE SIZE (INCHES)	METRIC IDENTIFICATION MILLIMETER (mm)	NOMINAL PIPE SIZE (INCHES)	METRIC IDENTIFICATION MILLIMETER (mm)
1/8	6	8	200
3/16	7	10	250
1/4	8	12	300
3/8	10	14	350
1/2	15	16	400
5/8	18	18	450
3/4	20	20	500
1	25	24	600
1-1/4	32	28	700
1-1/2	40	30	750
2	50	32	800
2-1/2	65	36	900
3	80	40	1000
3-1/2	90	44	1100
4	100	48	1200
4-1/2	115	52	1300
5	125	56	1400
6	150	60	1500

NOTE: THE METRIC DESIGNATION FOR ALL PIPE, VALVES AND FITTINGS OVER 60 INCHES WILL BE 25 mm PER INCH.

US ARMY CORPS OF ENGINEERS SAVANNAH DISTRICT

DESIGNED BY:
SUBMITTED BY:
CHIEF,
RECOMMENDED:
CHIEF, DESIGN BRANCH

DATE: 14JUL97 | REV.
CATEGORY CODE 721-11-11
SOLICITATION NO: DACA21-97-B-0055
PLOT DATE: $$DATE$$$$$$
PLOT SCALE:
CONTRACT NO: DACA21-98-C-0022

U.S. ARMY ENGINEER DISTRICT CORPS OF ENGINEERS SAVANNAH, GEORGIA

SYMBOL	DESCRIPTION	DATE	BY
1	AS BUILT GENERAL REVISIONS	30SEP04	DGC
		30JUL97	SWW

RANGER BARRACKS COMPLEX
FORT BENNING, GEORGIA
DINING FACILITY
MECHANICAL LEGEND

PLATE REFERENCE NUMBER: M-1
SHEET 323

RECORD DRAWING

DESIGN FILE: DONSPEC$$$$$$

GENERAL MECHANICAL NOTES

1. USE HUB TYPE PIPE WITH HANGERS PLACED WITHIN 150mm OF EACH JOINT FOR SANITARY SEWER AND GREASE LAIDEN SANITARY SEWER PIPING.
2. ALL FLOOR MOUNTED EQUIPMENT IN MECHANICAL ROOMS SHALL BE MOUNTED ON 150mm HIGH HOUSEKEEPING PADS. THESE PADS SHALL EXTEND 150 mm BEYOND THE EQUIPMENT IN ALL DIRECTIONS.
3. NO PIPING SHALL PENETRATE STRUCTURAL MEMBERS.
4. NO CHANGES IN DIRECTION GREATER THAN 45° SHALL BE USED ON THE WASTE PULPING SYSTEM.
5. WALL CLEANOUT COVER COLOR SHALL MATCH ADJACENT SURFACES.
6. ALL ROOF MOUNTED EQUIPMENT SHALL BE INSTALLED ON CURBS PROVIDED BY THE EQUIPMENT MANURFACTURER.
7. HIGH EFFICIENCY MOTORS ARE REQUIRED IN THIS PROJECT. SEE SPECIFICATION 16415 FOR SPECIFIC REQUIREMENTS.
8. ALL EXPOSED PIPING SHALL BE CHROMIUM-PLATED IN ACCORDANCE WITH THE PARAGRAPH "FIXTURES" IN SPECIFICATION SECITON 15400. FIXTURES SHALL INCLUDE ALL DEVICES WITH SUPPLY OR WASTE CONNECTIONS SPECIFIED WITHIN SPECIFICATION SECTIONS 11400 AND 15400. EXPOSED PIPING SHALL BE DEFINED AS PIPING BETWEEN THE CRAWL SPACE OR FLOOR PENETRATION AND THE FIXTURE. PIPING WITHIN THE MANUFACTURER'S STANDARD CABINET DOES NOT REQUIRE CHROMIUM-PLATING. PIPING UNDER TABLES SHALL BE CONSIDERED TO BE EXPOSED. IN LIEU OF CHROMIUM PLATING, STAINLESS STEEL PIPING IS ACCEPTABLE FOR KITCHEN EQUIPMENT IN ACCORDANCE WITH SPECIFICATION SECTION 11400.
9. ALL PIPING FOR KITCHEN EQUIPMENT SHALL BE IN ACCORDANCE WITH SPECIFICATION SECTIONS 15400 AND 15488.
10. ALL EXTERIOR EQUIPMENT AND METALS SHALL BE FACTORY FINISHED TO EQUAL ARCHITECTURAL METALS IN SPECIFICATION SECTION 09900.
11. INSTALL FLEXIBLE CONNECTIONS ON ALL DUCT CONNECTIONS TO AIR HANDLING UNITS AND MAKE-UP AIR UNITS. SEE DETAIL 10, SHEET M-9.
12. NO PLASTIC PIPING SHALL BE USED IN THE DINING FACILITY.

DIFFUSER, REGISTER, AND GRILLE SCHEDULE

SYMBOL	DESCRIPTION	SIZE mm (NECK)	VOL L/s	THROW m	MAX NC	REMARKS
D-1	SUPPLY DIFFUSER	200	125	2.0	40	2, 3, 4
D-2	SUPPLY DIFFUSER	200	150	3.25	40	2, 3, 5
D-3	SUPPLY DIFFUSER	250	250	2.5	40	2, 3, 4
D-4	SUPPLY TROFFER	150	80	2.0	35	2
D-5	SUPPLY DIFFUSER	200	115	3.0	40	2, 4, 6, 7
D-6	SUPPLY DIFFUSER	200	65	2.0	40	2, 3, 4
D-7	SUPPLY DIFFUSER	200	100	2.0	40	2, 3, 4
D-8	SUPPLY DIFFUSER	150	50	2.0	40	2, 3, 4
R-1	LINEAR SLOT RETURN	-	135	-	20	1, 2
R-2	RETURN GRILLE	200X200	130	-	20	1, 2
R-3	LINEAR SLOT RETURN	-	50	-	20	1, 2
R-4	RETURN GRILLE	300X300	210	-	40	1, 2
R-5	LINEAR SLOT RETURN	-	135	-	20	1, 2
R-6	RETURN GRILLE	200X200	150	-	20	1, 2
R-7	RETURN GRILLE	150X150	VARIES	-	20	1, 2
E-1	EXHAUST GRILLE	300X300	200	-	40	2
G-1	TRANSFER GRILLE	300X300	200	-	40	2

GENERAL NOTES:

1. NO PERFORATED PANEL DIFFUSERS, REGISTERS OR GRILLES WILL BE ACCEPTED.

DIFFUSER, REGISTER AND GRILLE NOTES:

1. OPEN TO PLENUM ABOVE.
2. COLOR TO MATCH CEILING GRID.
3. DIFFUSER SHALL NOT EXTEND BELOW CEILING.
4. 4-WAY AIR DISTRIBUTION.
5. 2-WAY AIR DISTRIBUTION.
6. SEE DETAIL 9, SHEET M-9.
7. 3 EACH, 20mm WIDE SLOTS.

EXHAUST HOOD SCHEDULE (SEE NOTE 4)

KITCHEN ITEM NO. (NOTE 1)	EXHAUST AIR FLOW (L/s)	EXHAUST PRESSURE DROP (Pa)	SUPPLY AIR FLOW (L/s) (NOTE 6)	SUPPLY PRESSURE DROP (Pa)	DIMENSIONS (L x W x H) (NOTES 3, 5)	HOOD TYPE
39	4025	400	3220	25	6700x3250x900	GREASE COLLECTION HOOD
55	500	75	NOT USED	NOT USED	3000x1220x900	CONDENSATE HOOD
71	580	65	464	25	1500x1050x900	GREASE COLLECTION HOOD
89	580	65	464	25	1500x1050x900	GREASE COLLECTION HOOD
120	720	100	NOT USED	NOT USED	3850x1350x900	CONDENSATE HOOD
C10	825	70	660	25	2350x1000x900	GREASE COLLECTION HOOD

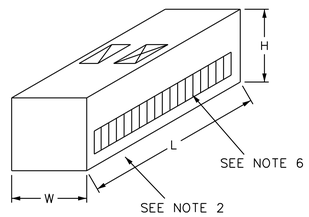

EXHAUST HOOD NOTES:

1. KITCHEN ITEM NO. CORRESPONDS TO THE KITCHEN EQUIPMENT ITEM NO. ON SHEETS K-2 & K-3.
2. BOTTOM OF HOOD SHALL BE AT 2100mm A.F.F. HOOD SHALL EXTEND TO THE CEILING. ADDITIONAL PANELS MAY BE INSTALLED IF NECESSARY TO REACH CEILING.
3. DIMENSIONS INCLUDE A 300mm OVERHANG IN THE FRONT AND A 150mm OVERHANG ON EACH SIDE AND THE BACK WHERE THE HOOD IS NOT AGAINST A WALL.
4. ALL WELDS SHALL BE GROUND FLAT AND POLISHED TO MATCH FACTORY WELDS.
5. DIMENSIONS ARE IN mm.
6. ALL SUPPLY AIR SHALL BE INTRODUCED TO THE OCCUPIED SPACE THROUGH GRILLES ON THE FRONT OF THE HOOD ONLY. BLADES IN THE GRILLES SHALL BE FIXED IN POSITION.

EXPANSION TANK SCHEDULE

SYMBOL	SIZE (LITERS)	SERVICE	MIN. OPERATING CONDITIONS	MAX. OPERATING CONDITIONS	TYPE
ET-1	670	CW	4.5°C/205 kPa	93°C/620 kPa	BLADDER
ET-2	370	HW	4.5°C/205 kPa	93°C/620 kPa	BLADDER

FAN SCHEDULE

SYMBOL	SERVICE	LOCATION	DESCRIPTION	AIR FLOW L/sec	ESP Pa	DRIVE TYPE	MAXIMUM RPM	REMARKS
EF-1	COOKING ISL.	KITCHEN	IN-LINE CENTRIFUGAL	4025	425	BELT	1750	1, 3, 4, 6
EF-2	COOKING ISL.	KITCHEN	IN-LINE CENTRIFUGAL	4025	425	BELT	1750	1, 3, 4, 6
EF-3	POT/PAN WASH	KITCHEN	CENTRIFUGAL	500	100	BELT	1750	1, 5
EF-4	GRILLE	SERVERY	CENTRIFUGAL	580	80	BELT	1750	1, 3, 4, 6
EF-5	GRILLE	SERVERY	CENTRIFUGAL	580	80	BELT	1750	1, 3, 4, 6
EF-6	GRILLE	SERVERY	CENTRIFUGAL	580	80	BELT	1750	1, 3, 4, 6
EF-7	GRILLE	SERVERY	CENTRIFUGAL	580	80	BELT	1750	1, 3, 4, 6
EF-8	FRY VAT	SERVERY	CENTRIFUGAL	580	60	BELT	1750	1, 3, 4, 6
EF-9	FRY VAT	SERVERY	CENTRIFUGAL	580	60	BELT	1750	1, 3, 4, 6
EF-10	CARRY-OUT	CARRY-OUT	CENTRIFUGAL	825	90	BELT	1750	1, 3, 4, 6
EF-11	DISHWASHER	DISHWASHING	CENTRIFUGAL	1240	150	BELT	1750	1, 5
EF-12	TOILET	KITCHEN	IN-LINE CENTRIFUGAL	150	30	BELT	1750	2
EF-13	TOILET	DINING AREA	CENTRIFUGAL	225	65	BELT	1750	2
EF-14	TOILET	DINING AREA	CENTRIFUGAL	150	35	BELT	1750	2
EF-15	CAN WASH	CAN WASH	CENTRIFUGAL	200	65	BELT	1750	1
EF-16	WASTE PULPING	WASTE PULP.	CENTRIFUGAL	200	55	DIRECT	1750	1
SF-1	VENT AIR	MECH ROOM	ROOF MTD CENT.	2550	50	BELT	1750	
SF-2	VENT AIR	MECH ROOM	WALL PROP	750	70	BELT	1750	

FAN SCHEDULE NOTES:

1. UPBLAST FAN.
2. DOWNWARD DISCHARGE FAN.
3. INTERLOCK EXHAUST FAN WITH FIRE SUPRESSION SYSTEM IN ACCORDANCE WITH NFPA 96-1994, PARAGRAPHS 5.2 AND 7.3.
4. PROVIDE HINGED CONNECTION IN ACCORDANCE WITH NFPA 96-1994 PARAGRAPH 4-8.2.1
5. ALL DUCTWORK ON THIS SYSTEM SHALL BE STAINLESS STEEL.
6. FAN SHALL COMPLY WITH NFPA 96-1994, CHAPTER 5.

US ARMY CORPS OF ENGINEERS SAVANNAH DISTRICT

DATE: 14JUL97 | REV.
CATEGORY CODE 721-11-11
SOLICITATION NO: DACA21-97-B-0055
PLOT DATE: $$DATE$$$$$$
PLOT SCALE: :
CONTRACT NO: DACA21-98-C-0022

U.S. ARMY ENGINEER DISTRICT
CORPS OF ENGINEERS
SAVANNAH, GEORGIA

SYMBOL	DESCRIPTION	DATE	BY
	AS BUILT GENERAL REVISIONS	30JUL97	SWW
		30SEP04	DGC

RANGER BARRACKS COMPLEX
FORT BENNING, GEORGIA
DINING FACILITY
MECHANICAL SCHEDULES

PLATE REFERENCE NUMBER:
M-2
SHEET 324

RECORD DRAWING

DESIGN FILE: DGNSPEC$$$$$$

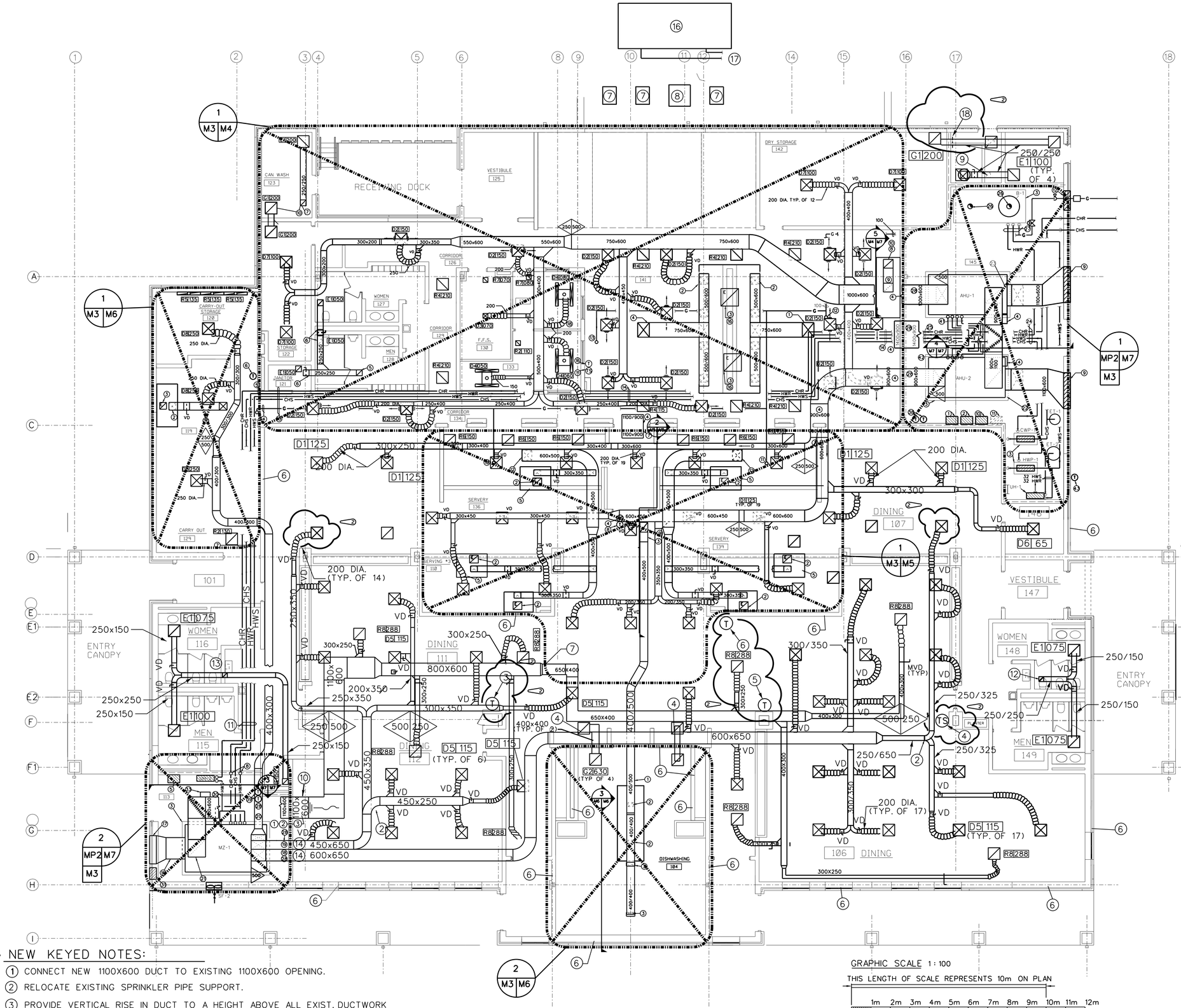

GENERAL NOTES:

1. SEE GENERAL MECHANICAL NOTES ON SHEET M-2.
2. ALL HALF-SIZED TEXT AND SHEET IDENTIFIERS ON THIS PLATE, PLEASE REFER TO ASSOCIATED ENLARGED PLAN SHEET.

KEYED NOTES:

1. 1200mmX300mm LOUVER IN AIR WELL. COORDINATE WITH ARCHITECTURAL AND STRUCTURAL FOR EXACT LOCATION.
2. PARALLEL FLOW BRANCH WITH SPLITTER DAMPER. SPLIT IN DUCT IS HORIZONTAL.
3. MODULATING T'STAT FOR ZONE 2 OF MZ-1.
4. TEMP SENSOR FOR MZ-1.
5. MODULATING T'STAT FOR ZONE 1 OF MZ-1.
6. NIGHT STAT FOR MZ-1.
7. CONDENSING UNIT FOR REFRIGERATOR.
8. CONDENSING UNIT FOR FREEZER.
9. 300mmX300mm EXHAUST DUCT UP TO EF-16 ON ROOF.
10. RETURN AIR INLET.
11. 80mm CHR, 80mm CHS, 80mm HWR, 80mm HWS
12. 250mmX250mm EXHAUST DUCT UP TO GOOSENECK OUTLET ON ROOF. CABINET TYPE EXHAUST FAN EF-14 MOUNTED IN DUCT RISER.
13. 250mmX250mm EXHAUST DUCT UP TO GOOSENECK OUTLET ON ROOF. CABINET TYPE EXHAUST FAN EF-13 MOUNTED IN DUCT RISER.
14. MOUNT BOTTOM OF DUCT AT 3000mm A.F.F. COORDINATE WITH STRUCTURAL OPENING IN WALL.
15. PIPE CHILLED WATER LINES TO CHILLER.
16. CHILLER CH-1. SEE DETAIL 1, SHEET M-11.
17. PIPE CHILLED WATER LINES TO MECH. ROOM 145
18. COUNTERBALANCED BACKDRAFT DAMPER IN 250mmX250mm DUCT. ADJUST TO OPEN AT 12 Pa.

NEW KEYED NOTES:

1. CONNECT NEW 1100X600 DUCT TO EXISTING 1100X600 OPENING.
2. RELOCATE EXISTING SPRINKLER PIPE SUPPORT.
3. PROVIDE VERTICAL RISE IN DUCT TO A HEIGHT ABOVE ALL EXIST. DUCTWORK AND ELECTRICAL CONDUIT.
4. ROUTE NEW 400X400 DUCT BELOW EXISTING 650X400 DUCT.
5. ROUTE NEW 350X300 DUCT BELOW EXISTING 300X350 EXHAUST HEAD DUCT.
6. DELETE LINEAR SLOT RETURN DIFFUSERS FROM CONTRACT.
7. CUT EXISTING METAL FRAMING TO ACCOMODATE NEW DUCTWORK. REFRAME OPENING AROUND DUCT.

DINING FACILITY: HVAC PLAN

SCALE: 1:100

GRAPHIC SCALE 1 : 100

THIS LENGTH OF SCALE REPRESENTS 10m ON PLAN

1m 2m 3m 4m 5m 6m 7m 8m 9m 10m 11m 12m

THIS LENGTH OF SCALE REPRESENTS 100mm ON PLAN

THIS LENGTH OF SCALE REPRESENTS 1m ON PLAN

ALL DIMENSIONS ARE MILLIMETERS (mm) UNLESS OTHERWISE NOTED.

US ARMY CORPS OF ENGINEERS SAVANNAH DISTRICT

DATE: 14JUL97	REV.
CATEGORY CODE 721-11-11	
SOLICITATION NO: DACA21-97-B-0055	
PLOT DATE: $$DATE$$$$$$	
PLOT SCALE:	

CONTRACT NO: DACA21-98-C-0022

U.S. ARMY ENGINEER DISTRICT CORPS OF ENGINEERS SAVANNAH, GEORGIA

SYMBOL	DESCRIPTION	DATE	BY
C	REVISED AS BUILT	30SEP04	DGC
C	REVISED IN ACCORDANCE WITH MODIFICATION '98-22-H	17AUG98	SWW
C	GENERAL REVISIONS	30JUL97	SWW

RANGER BARRACKS COMPLEX
FORT BENNING, GEORGIA

DINING FACILITY
HVAC FLOOR PLAN

PLATE REFERENCE NUMBER:
M-3
SHEET 325

RECORD DRAWING

DESIGN FILE: DONSPEC$$$$$$

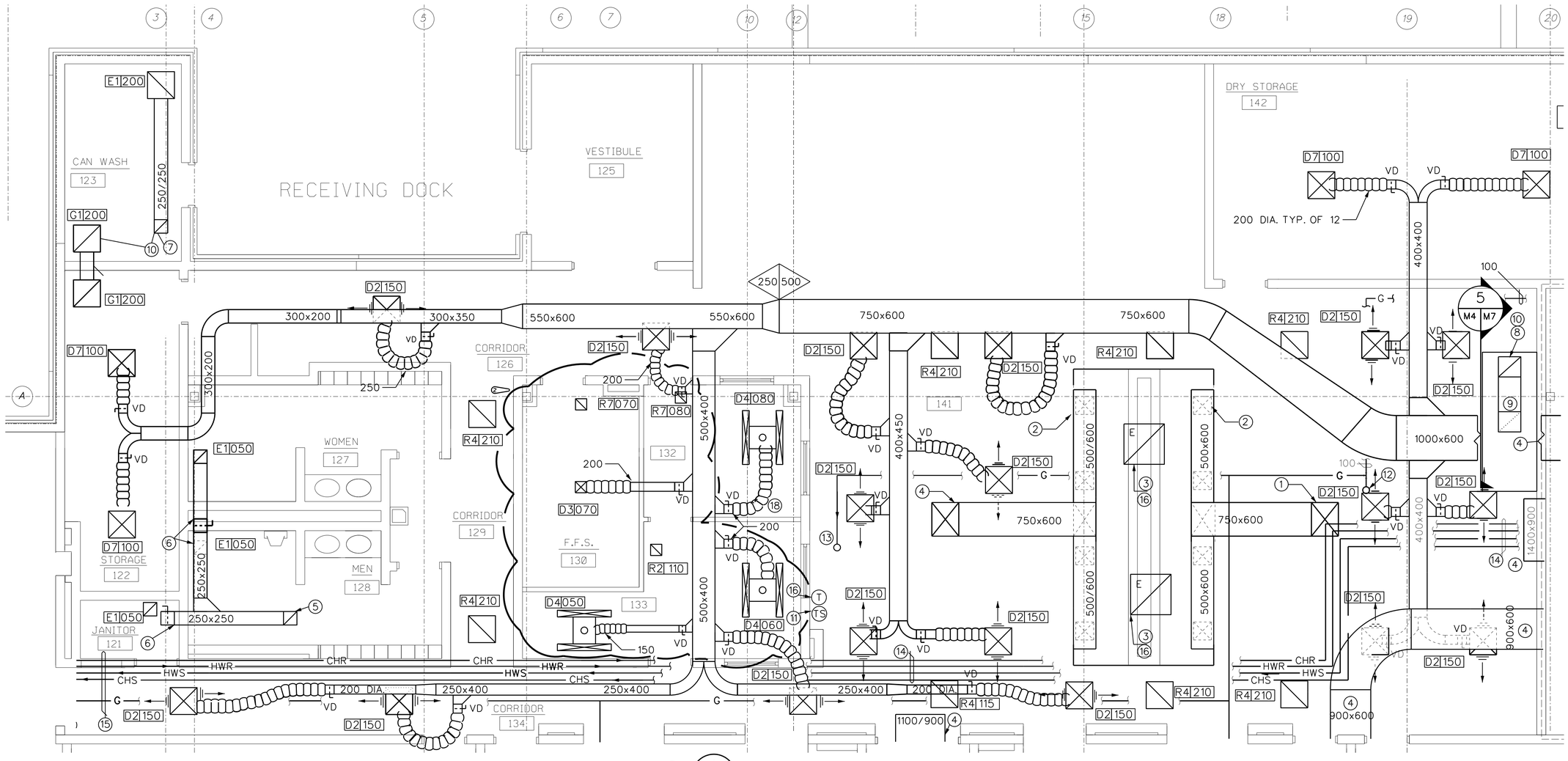

ENLARGED KITCHEN HVAC PLAN

1 / M3 M4

SCALE: 1 : 50

GENERAL NOTES:

1. SEE GENERAL NOTES ON SHEET M-2.

KEYED NOTES FROM KITCHEN HVAC PLAN:

1. 750mmX600mm DUCT DOWN FROM MAKE-UP AIR UNIT ON ROOF.
2. 450mmX450mm DUCT DOWN TO EXHAUST HOOD (TYP. OF 4).
3. 900mmX900mm DUCT UP FROM EXHAUST HOOD TO EXHAUST FAN ABOVE. SEE SHEET M-8 FOR CONTINUATION.
4. MOUNT BOTTOM OF DUCT AT 3000mm A.F.F. COORDINATE WITH STRUCTURAL OPENING IN WALL.
5. 250mmX250mm DUCT UP TO EXHAUST FAN EF-12 ON ROOF.
6. 150mmX150mm DUCT TO GRILLE WITH VOLUME DAMPER.
7. 300mmX300mm EXHAUST DUCT UP TO EF-15 ON ROOF. SEE SHEET M-8 FOR CONTINUATION.
8. 450mmX300mm DUCT UP TO EF-3 ON ROOF. SEE SHEET M-8 FOR CONTINUATION.
9. 300mmX350mm EXHAUST DUCT.
10. ALL DUCT IN THIS EXHAUST SYSTEM SHALL BE CONSTRUCTED OF STAINLESS STEEL. DUCT SHALL BE INSTALLED WITH A 2% SLOPE BACK TOWARD THE AIR INLETS.
11. TEMPERATURE SENSOR FOR AHU-1.
12. 65mm GAS LINE UP TO MAU-2 ON ROOF. SEE SHEET M-8 FOR CONTINUATION.
13. 65mm GAS LINE UP TO MAU-1 ON ROOF. SEE SHEET M-8 FOR CONTINUATION.
14. 100mm CHR; 80mm HWR; 80mm HWS; 100mm CHS.
15. 100mm CHR; 80mm HWR; 80mm HWS; 100mm CHS; 32mm GAS.
16. DUCT SHALL BE STAINLESS STEEL FROM INLET TO FAN.
17. NIGHT STAT FOR AHU-1.
18. HVAC SYSTEM CLOCK OVERRIDE SWITCH ON WALL OF ROOM 132. PROVIDE NAMEPLATE WITH LABEL "HVAC SYSTEM OVERRIDE. 4 HOUR DURATION."

GRAPHIC SCALE 1 : 50

THIS LENGTH OF SCALE REPRESENTS 5m ON PLAN

1m 2m 3m 4m 5m 6m

THIS LENGTH OF SCALE REPRESENTS 50mm ON PLAN

THIS LENGTH OF SCALE REPRESENTS 1m ON PLAN

ALL DIMENSIONS ARE MILLIMETERS (mm) UNLESS OTHERWISE NOTED.

US ARMY CORPS OF ENGINEERS SAVANNAH DISTRICT

DATE: 14JUL97 | REV.
CATEGORY CODE 721-11-11
SOLICITATION NO: DACA21-97-B-0055
PLOT DATE: $$DATE$$$$$$
PLOT SCALE: 1
CONTRACT NO: DACA21-98-C-0022

U.S. ARMY ENGINEER DISTRICT CORPS OF ENGINEERS SAVANNAH, GEORGIA

SYMBOL	DESCRIPTION	DATE	BY
	AS BUILT	30SEP04	DGC
6	REVISED IN ACCORDANCE WITH MODIFICATION 98-22-H	17AUG98	SWW
5	GENERAL REVISIONS	30JUL97	SWW

RANGER BARRACKS COMPLEX
FORT BENNING, GEORGIA

DINING FACILITY

ENLARGED HVAC PLANS

PLATE REFERENCE NUMBER: M-4

SHEET 326

RECORD DRAWING

DESIGN FILE: DGNSPEC$$$$$$

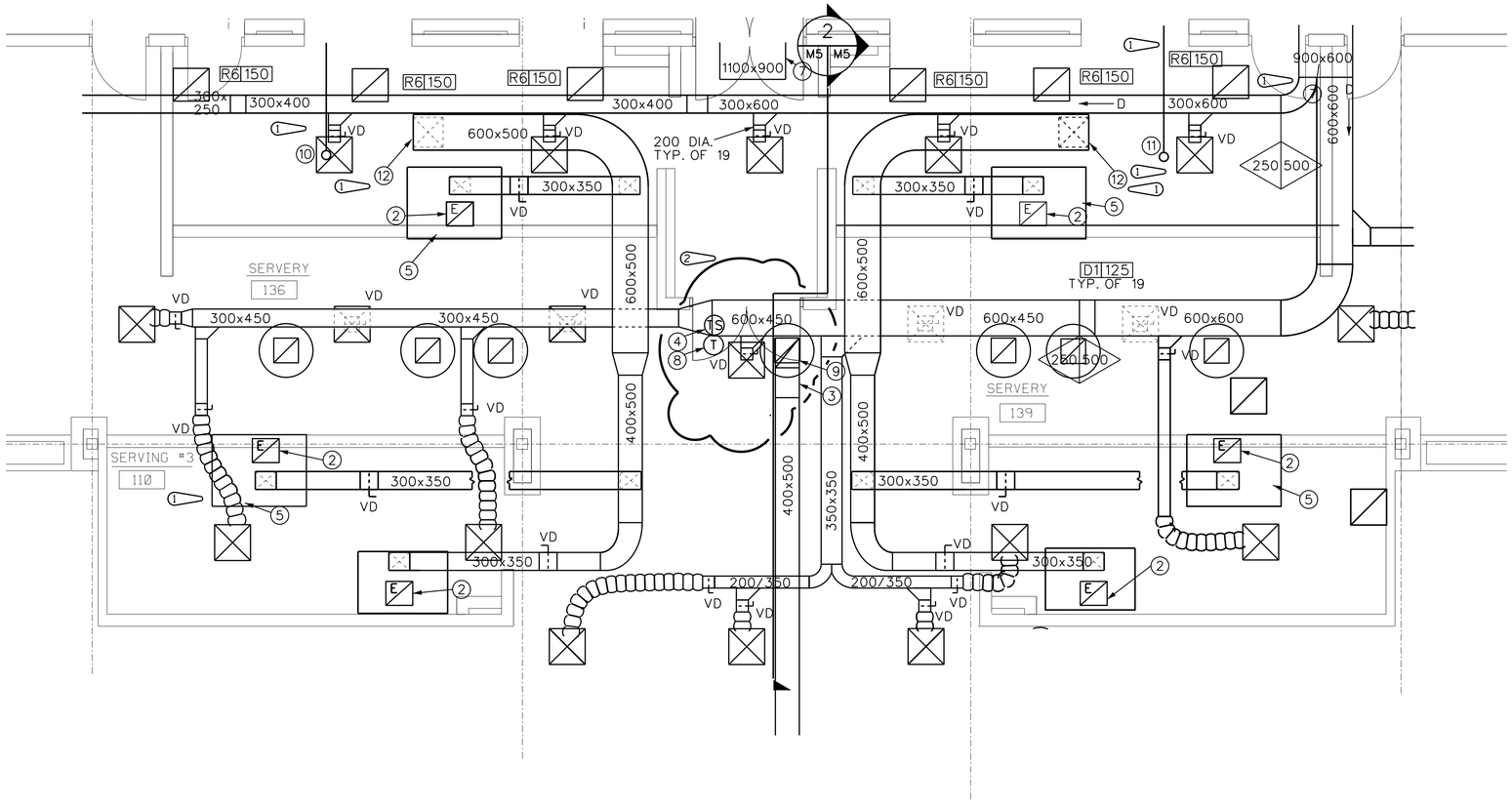

1 M3 M5 ENLARGED SERVERY HVAC PLAN
SCALE 1:50

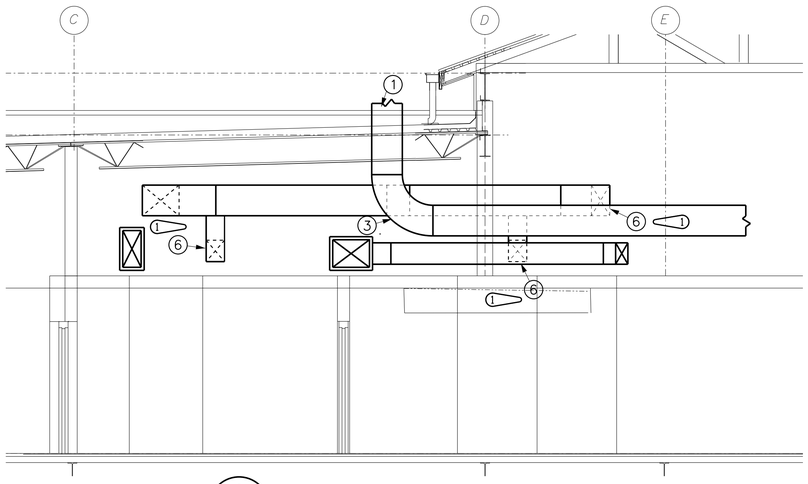

2 M5 M5 SECTION OF SERVERY AREA
SCALE 1:50

GENERAL NOTES:

1. SEE GENERAL NOTES ON SHEET M-2.

KEYED NOTES FOR SERVERY HVAC:

1. 500 X 400 STAINLESS STEEL EXHAUST DUCT UP TO EF-11 ON ROOF. SEE SHEET M-8 FOR CONTINUATION.
2. 450 X 400 STAINLESS STEEL EXHAUST DUCT UP TO EXHAUST FAN ON ROOF. SEE SHEET M-8 FOR CONTINUATION.
3. LONG RADIUS ELBOW FROM VERTICAL POSITION TO HORIZONTAL.
4. TEMPERATURE SENSOR TO AHU-2.
5. INSTALL HOOD NEXT TO BULKHEAD FRAMING.
6. MAKE-UP AIR DUCT TO EXHAUST HOOD.
7. MOUNT BOTTOM OF DUCT AT 3000mm A.F.F. COORDINATE WITH STRUCTURAL OPENING IN WALL.
8. NIGHT STAT FOR AHU-2.
9. 400 X 500 STAINLESS STEEL EXHAUST DUCT UP TO EF-11 ON ROOF. SEE SHEET M-8 FOR CONTINUATION.
10. 65mm GAS LINE UP TO MAU-3 ON ROOF. SEE SHEET M-8 FOR CONTINUATION.
11. 65mm GAS LINE UP TO MAU-4 ON ROOF. SEE SHEET M-8 FOR CONTINUATION.
12. 500 X 500 MAKE-UP AIR DUCT UP TO MAKE-UP AIR UNIT ON ROOF. SEE SHEET M-8 FOR CONTINUATION.

GRAPHIC SCALE 1 : 50

THIS LENGTH OF SCALE REPRESENTS 5m ON PLAN

1m 2m 3m 4m 5m 6m

THIS LENGTH OF SCALE REPRESENTS 50mm ON PLAN

THIS LENGTH OF SCALE REPRESENTS 1m ON PLAN

ALL DIMENSIONS ARE MILLIMETERS (mm) UNLESS OTHERWISE NOTED.

US ARMY CORPS OF ENGINEERS SAVANNAH DISTRICT

DATE: 14-JUL-97
REV.
CATEGORY CODE 721-11-11
SOLICITATION NO: DACA21-97-B-0055
PLOT DATE: $$DATE$$$$$$
PLOT SCALE: :
CONTRACT NO: DACA21-98-C-0022

U.S. ARMY ENGINEER DISTRICT
CORPS OF ENGINEERS
SAVANNAH, GEORGIA

SYMBOL	DESCRIPTION	DATE	BY
2	AS BUILT	30SEP04	DGC
1	REVISED IN ACCORDANCE WITH MODIFICATION 98-22-H	17AUG98	SWW
	GENERAL REVISIONS	30JUL97	SWW

RANGER BARRACKS COMPLEX
FORT BENNING, GEORGIA

DINING FACILITY
ENLARGED HVAC PLANS

PLATE REFERENCE NUMBER:
M-5
SHEET 327

DESIGN FILE: DONSPEC$$$$$$

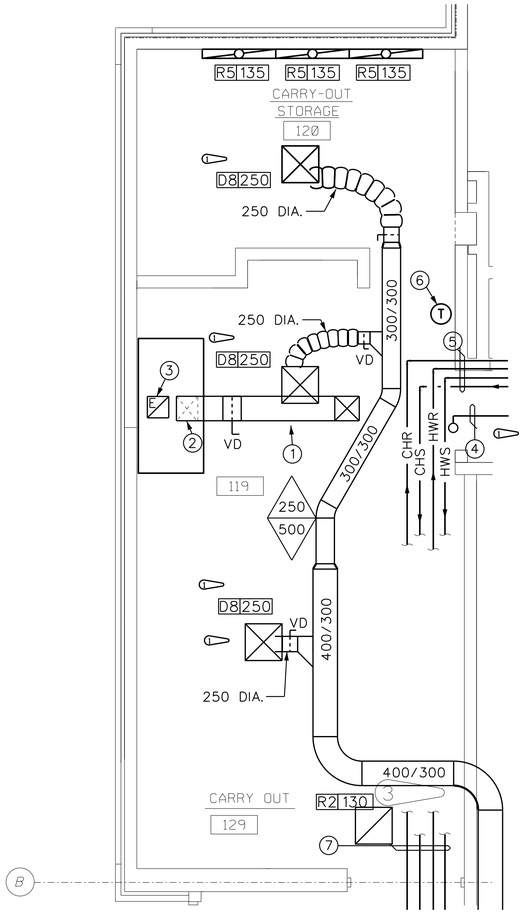

1 M3|M6 ENLARGED CARRY-OUT HVAC PLAN

SCALE 1:50

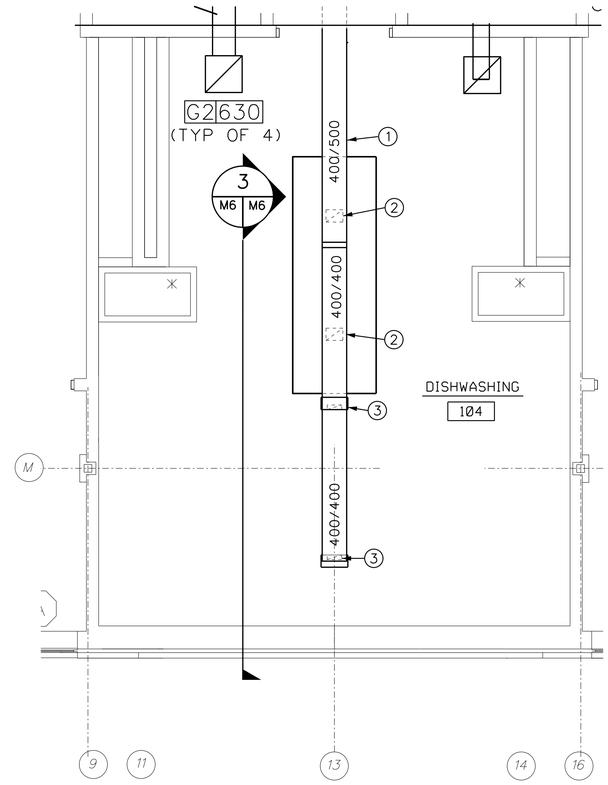

2 M3|M6 ENLARGED DISHWASHING AREA HVAC PLAN

SCALE 1:50

GENERAL NOTES:

1. SEE GENERAL NOTES ON SHEET M-2.

KEYED NOTES FOR CARRY-OUT AREA HVAC PLAN:

1. 400 X 400 DUCT DOWN FROM MAU-5 ON THE ROOF. SEE SHEET M-8 FOR CONTINUATION.
2. 400 X 350 DUCT TO EXHAUST HOOD.
3. 350 X 350 STAINLESS STEEL EXHAUST DUCT UP TO EF-10 ON ROOF. SEE SHEET M-8 FOR CONTINUATION. OFFSET WILL BE REQUIRED IN DUCT TO AVOID JOIST ABOVE. SEE DETAIL 8, SHEET M-10 FOR OFFSET CONSTRUCTION.
4. 20mm GAS LINE UP TO/DOWN FROM MAU-5 ON ROOF. SEE SHEET M-8 FOR CONTINUATION.
5. 100 CHR; 80 HWR; 80 HWS; 100 CHS.
6. MODULATING T-STAT FOR ZONE 3 OF MZ-1.
7. 100 CHR; 100 CHS; 80 HWR; 80 HWS.

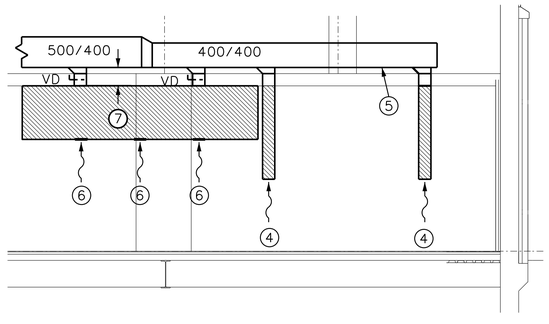

3 M6|M6 SECTION OF DISHWASHING AREA

SCALE 1:50

GENERAL NOTES:

1. SEE GENERAL NOTES ON SHEET M-2.

KEYED NOTES FOR DISHWASHING AREA HVAC PLAN AND SECTION:

1. ALL DUCT IN THIS SYSTEM SHALL BE CONSTRUCTED OF STAINLESS STEEL. DUCT SHALL BE INSTALLED WITH A 2% SLOPE BACK TOWARD THE AIR INLETS.
2. 275 X 200 DUCT UP FROM EXHAUST HOOD. INSTALL VOLUME DAMPER AND USE 45° CONNECTION AT MAIN DUCT. BALANCE AIR FLOW TO 360 L/s.
3. DUCT UP FROM EXHAUST HOOD. INSTALL VOLUME DAMPER AND USE 45° CONNECTION AT MAIN DUCT. DUCT SIZE PER KITCHEN EQUIPMENT SCHEDULE. BALANCE AIR FLOW TO 260 L/s.
4. AIR IN FROM DISHWASHER. VOLUME DAMPERS SHALL BE PROVIDED WITH DUCT CONNECTION KIT SUPPLIED BY DISHWASHER MANUFACTURER.
5. RUN DUCT BETWEEN JOISTS.
6. AIR INTO EXHAUST HOOD FROM OCCUPIED SPACE.
7. MAINTAIN DISTANCE REQUIRED FOR VOLUME DAMPERS.
8. SLOT RETURNS ARE TO BE CONTINUOUS ALONG WALL.

GRAPHIC SCALE 1:50

THIS LENGTH OF SCALE REPRESENTS 5m ON PLAN

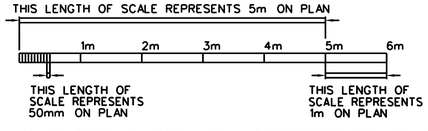

ALL DIMENSIONS ARE MILLIMETERS (mm) UNLESS OTHERWISE NOTED.

US ARMY CORPS OF ENGINEERS SAVANNAH DISTRICT

DATE: 14JUL97 | REV.
CATEGORY CODE 721-11-11
SOLICITATION NO: DACA21-97-B-0055
PLOT DATE: $$DATE$$$$$$
PLOT SCALE: 1
CONTRACT NO: DACA21-98-C-0022

U.S. ARMY ENGINEER DISTRICT
CORPS OF ENGINEERS
SAVANNAH, GEORGIA

SYMBOL	DESCRIPTION	DATE	BY
	AS BUILT	30SEP04	DGC
1	GENERAL REVISIONS	30JUL97	SWW

RANGER BARRACKS COMPLEX
FORT BENNING, GEORGIA

DINING FACILITY

ENLARGED HVAC PLANS

PLATE REFERENCE NUMBER: M-6

SHEET 328

RECORD DRAWING

DESIGN FILE: DONSPEC$$$$$$

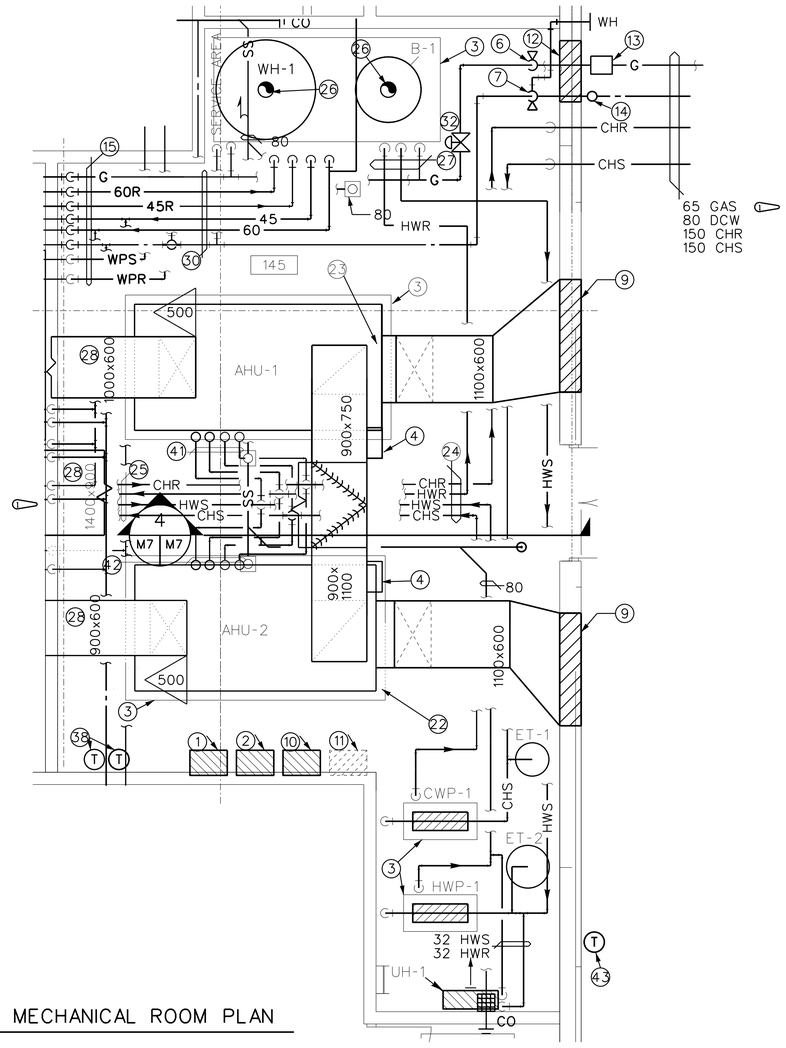

1 MP2 M7 M3 ENLARGED MECHANICAL ROOM PLAN
SCALE 1:50

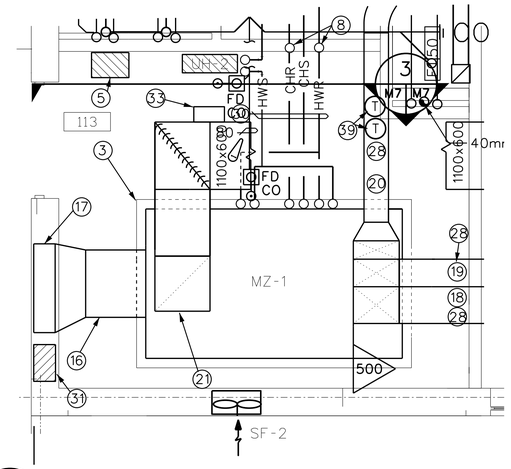

2 MP2 M7 M3 ENLARGED MECHANICAL ROOM PLAN
SCALE 1:50

NOTE: VALVES AND FITTINGS NOT SHOWN FOR CLARITY.

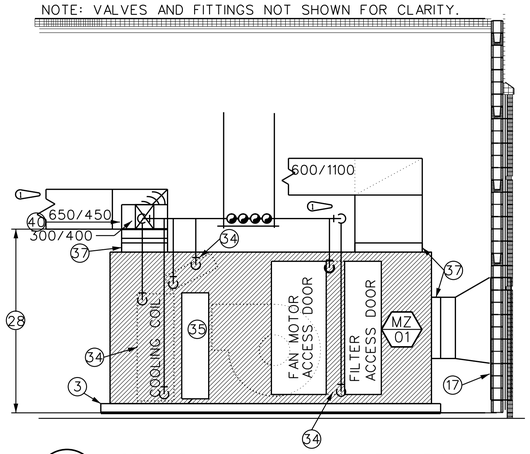

3 M7 M7 SECTION THRU MECHANICAL ROOM
SCALE 1:50

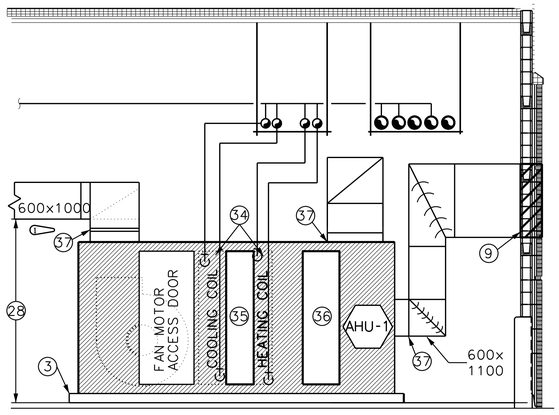

NOTE: VALVES AND FITTINGS NOT SHOWN FOR CLARITY.

4 M7 M7 SECTION THRU MECHANICAL ROOM
SCALE 1:50

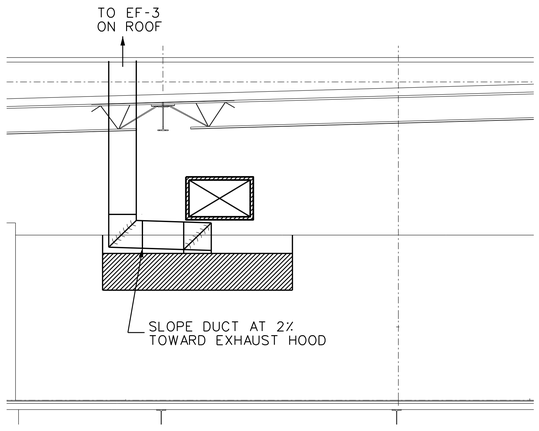

5 M4 M7 SECTION AT POT AND PAN WASH
SCALE 1:50

KEYED NOTES FOR MECHANICAL ROOM PLANS AND SECTIONS:

1. AHU-1 AND HYDRONIC SYSTEM CONTROL PANEL.
2. AHU-2 CONTROL PANEL.
3. 150mm HIGH HOUSEKEEPING PAD. EXTEND PAD 150mm BEYOND UNIT FOOTPRINT.
4. 500mmX650mm RELIEF AIR DUCT. RELIEVE AIR INTO MECH. ROOM.
5. MZ-1 CONTROL PANEL.
6. PLUG VALVE IN GAS LINE
7. BALL VALVE IN DOMESTIC WATER LINE.
8. AUTOMATIC AIR VENT. PIPING AT THIS POINT IS TO BE HIGHER THAN ANY OTHER POINT IN THE SYSTEM. SEE DETAIL 6, SHEET M-10.
9. 1800mmX1200mm OUTDOOR AIR INTAKE LOUVER. SEE SECTION C, SHEET A-5, FOR EXACT LOCATION.
10. DATA TERMINAL CABINET.
11. FIELD INTERFACE PANEL. NOT IN CONTRACT.
12. 2600mmX1000mm LOUVER AND 800mmX1000mm LOUVER. SEE ARCHITECTURAL FOR EXACT LOCATION AND DETAIL 4, SHEET M-10 FOR CONFIGURATION.
13. GAS METER WITH PULSE GENERATOR, SEE DETAIL 7, SHEET MP-9. GAS CONSUMPTION WILL BE 50 L/s.
14. WATER METER WITH PULSE GENERATOR. SEE SPEC. SECTION 02660. SYSTEM WAS DESIGNED FOR A FLOW OF 9 L/s AT 276 kPa.
15. PIPES DOWN TO CRAWL SPACE BELOW. SEE DETAIL 2, SHEET MP-11.
16. 1100mmX1000mm OUTSIDE AIR DUCT TO MZ-1.
17. 1400mmX2000mm LOUVER. TOP PORTION (1400mmX1400mm) OUTSIDE AIR LOUVER FOR MZ-1. BOTTOM PORTION (1400mmX600mm) SHALL HAVE A MOTORIZED DAMPER. DAMPER SHALL BE INTERLOCKED SF-2 OPERATION. WITH SEE SECTION A, SHEET A-4, FOR EXACT LOCATION.
18. 600mmX650mm SUPPLY AIR DUCT FOR ZONE 1.
19. 450mmX650mm SUPPLY AIR DUCT FOR ZONE 2.
20. 400mmX300mm SUPPLY AIR DUCT FOR ZONE 3.
21. 900mmX900mm RETURN AIR DUCT TO MZ-1.
22. 1100mmX900mm RETURN AIR DUCT TO AHU-2. 1100mmX900mm RELIEF AIR DUCT. RELIEVE AIR INTO MECHANICAL ROOM.
23. 750mmX900mm RETURN AIR DUCT DOWN TO AHU-1. 750mmX900mm RELIEF AIR DUCT UP INTO MECH. ROOM.
24. 150mm CHR; 100mm HWR; 100mm HWS; 150mm CHS
25. 100mm CHR; 80mm HWR; 80mm HWS; 100mm CHS.
26. 250mm DIA. FLUE THRU ROOF. SEE DETAIL 8, SHEET MP-9.
27. 50mm GAS; 100mm HWS; 100mm HWR.
28. MOUNT BOTTOM OF DUCT AT 3000mm A.F.F. COORDINATE WITH STRUCTURAL OPENING IN WALL.
29. SEE FIRE PROTECTION DRAWINGS FOR CONTINUATION.
30. 65mm GAS; 20mm 60R; 20mm 45R; 50mm 45° C; 40mm 60° C; 80 DCW.
31. 600mmX2400mm LOUVER FOR RELIEF AIR. BAROMETRIC DAMPER SHALL BE SET AT 12.5 Pa.
32. ELECTRICALLY OPERATED SOLENOID VALVE. VALVE SHALL BE A NORMALLY CLOSED PLUG VALVE. VALVE SHALL BE OPENED WHEN THE FIRE ALARM CONTROL PANEL IS NOT IN AN ALARMED CONDITION.
33. 500mmX500mm RELIEF AIR DUCT. RELIEVE AIR INTO MECH. ROOM.
34. SEE DETAIL 1, SHEET M-9 FOR PIPING CONNECTIONS TO COIL.
35. MINIMUM 300mm WIDE ACCESS DOOR.
36. ACCESS DOOR TO FILTER SECTION. THIS DOOR MAY BE USED FOR ACCESS TO HEATING COIL FACE.
37. FLEXIBLE CONNECTION, SEE DETAIL 10, SHEET M-9.
38. THERMOSTATS FOR UH-1 AND SF-1.
39. THERMOSTATS FOR UH-2 AND SF-2.
40. MANUAL, LOCKING, OPPOSED BLADE DAMPER (TYP. FOR EACH ZONE).
41. 80 mm CHS; 80mm CHR; 80mm HWS; 80mm HWR
42. 80mm CHR; 80mm CHS; 50mm HWS; 50mm HWR
43. OUTSIDE AIR TEMP. SENSOR WITH SUNSHIELD.

GENERAL NOTES:

1. SEE GENERAL NOTES ON SHEET M-2.

GRAPHIC SCALE 1:50

THIS LENGTH OF SCALE REPRESENTS 5m ON PLAN

1m 2m 3m 4m 5m 6m

THIS LENGTH OF SCALE REPRESENTS 50mm ON PLAN

THIS LENGTH OF SCALE REPRESENTS 1m ON PLAN

ALL DIMENSIONS ARE MILLIMETERS (mm) UNLESS OTHERWISE NOTED.

US ARMY CORPS OF ENGINEERS SAVANNAH DISTRICT

DATE: 14JUL97 | REV.
CATEGORY CODE 721-11-11
SOLICITATION NO: DACA21-97-B-0055
PLOT DATE: $$DATE$$$$$$
PLOT SCALE: :
CONTRACT NO: DACA21-98-C-0022

U.S. ARMY ENGINEER DISTRICT CORPS OF ENGINEERS SAVANNAH, GEORGIA

SYMBOL	DESCRIPTION	DATE	BY
	AS BUILT	30SEP04	DGC
	CHANGE TEXT OF THREE KEY NOTES	08AUG97	SWW
	GENERAL REVISIONS	30JUL97	SWW

RANGER BARRACKS COMPLEX
FORT BENNING, GEORGIA
DINING FACILITY
ENLARGED HVAC PLANS

PLATE REFERENCE NUMBER: M-7
SHEET 329

RECORD DRAWING

DESIGN FILE: DONSPEC$$$$$$

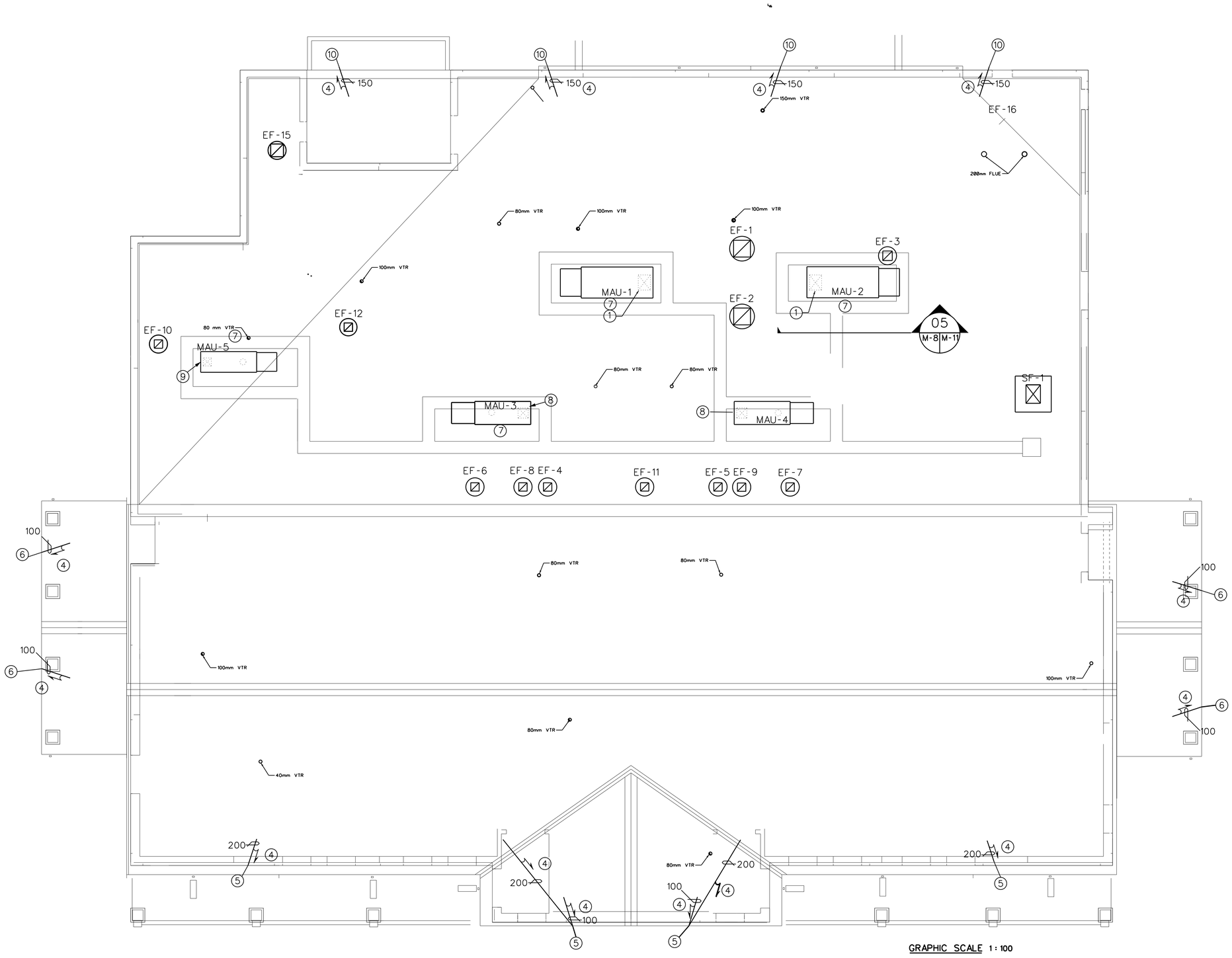

MECHANICAL ROOF PLAN

SCALE: 1:100

GRAPHIC SCALE 1 : 100

THIS LENGTH OF SCALE REPRESENTS 10m ON PLAN

1m 2m 3m 4m 5m 6m 7m 8m 9m 10m 11m 12m

THIS LENGTH OF SCALE REPRESENTS 100mm ON PLAN

THIS LENGTH OF SCALE REPRESENTS 1m ON PLAN

ALL DIMENSIONS ARE MILLIMETERS (mm) UNLESS OTHERWISE NOTED.

MECHANICAL ROOF PLAN GENERAL NOTES:

1. SEE GENERAL MECHANICAL NOTES ON SHEET M-2.
2. VENT THRU ROOF CONSTRUCTION SHALL BE AS SHOWN ON DETAIL 7, SHEET A-24.
3. ALL EXTERIOR EQUIPMENT AND METALS SHALL BE FACTORY FINISHED TO EQUAL EXTERIOR METALS IN SPECIFICATION SECTION 09000.
4. SEE SHEETS A-3 AND E-3 FOR LOCATIONS OF ALL DEVICES OTHER THAN PLUMBING VENTS, MAKE-UP AIR UNITS AND EXHAUST FANS.
5. EXPOSED ROOF DRAIN PIPING AND THAT WITHIN 300mm OF AN INLET OR OUTLET SHALL BE METALLIC.

MECHANICAL ROOF PLAN KEYED NOTES:

1. 250kPa PRESSURE CLASS DUCT DOWN TO MAKE-UP AIR DUCT BELOW. SEE SHEET M-3 FOR CONTINUATION.
2. DOWN TO MAKE-UP AIR DUCT BELOW. SEE SHEET M-4 FOR CONTINUATION.
3. DOWN TO MAKE-UP AIR DUCT BELOW. SEE SHEET M-6 FOR CONTINUATION.
4. INSTALL PIPE WITH 1% SLOPE.
5. 150mm PIPE DOWN TO OUTLET. SEE ARCH. FOR CONCEALED AND EXPOSED LOCATIONS AND OUTLETS.
6. 50mm PIPE DOWN TO OUTLET. SEE ARCH. FOR CONCEALED AND EXPOSED LOCATIONS AND OUTLETS.
7. CHILLED WATER, GAS AND CONDENSATE LINES UP FROM SPACE BELOW. ROOF PENETRATIONS WILL BE MADE INSIDE THE CURB PROVIDED FOR THE UNIT.
8. 250kPa PRESSURE CLASS DUCT DOWN FROM MAKE-UP AIR UNIT TO EXHAUST HOOD SUPPLY BELOW. SEE SHEET M-4 FOR CONTINUATION.
9. 250kPa PRESSURE CLASS DUCT DOWN FROM MAKE-UP AIR UNIT TO EXHAUST HOOD SUPPLY BELOW. SEE SHEET M-5 FOR CONTINUATION.
10. 150mmX150mm DOWNSPOUT. SEE ARCHITECTURAL FOR DETAILS.

US ARMY CORPS OF ENGINEERS SAVANNAH DISTRICT

DATE: 14-JUL-97
REV.
CATEGORY CODE 721-11-11
SOLICITATION NO: DACA21-97-B-0055
PLOT DATE: $$DATE$$$$$$
PLOT SCALE:
CONTRACT NO: DACA21-98-C-0022

U.S. ARMY ENGINEER DISTRICT
CORPS OF ENGINEERS
SAVANNAH, GEORGIA

SYMBOL	DESCRIPTION	DATE	BY
	AS BUILT	30SEP04	DGC

RANGER BARRACKS COMPLEX
FORT BENNING, GEORGIA

DINING FACILITY

MECHANICAL ROOF PLAN

PLATE REFERENCE NUMBER:

M-8

SHEET 330

RECORD DRAWING

DESIGN FILE: DONSPEC$$$$$$

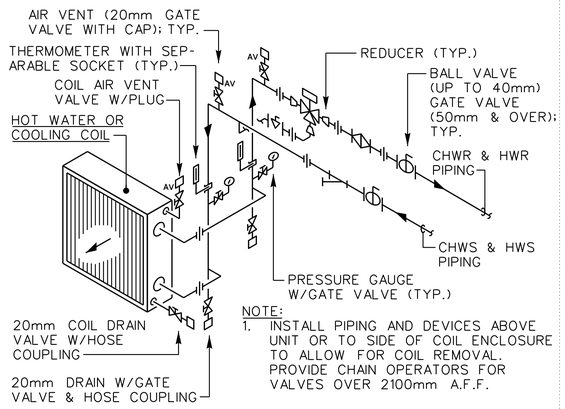

NOTE:
1. INSTALL PIPING AND DEVICES ABOVE UNIT OR TO SIDE OF COIL ENCLOSURE TO ALLOW FOR COIL REMOVAL. PROVIDE CHAIN OPERATORS FOR VALVES OVER 2100mm A.F.F.

1 TYP M9 AIR HANDLING UNIT COIL PIPING SINGLE COIL CONNECTION

NOT TO SCALE

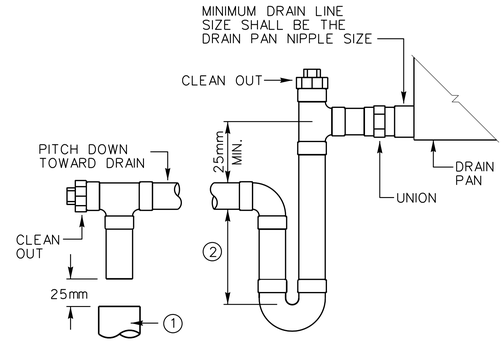

KEYED NOTES:

1. FLOOR DRAIN. COORDINATE LOCATION WITH CONDENSATE DRAIN.
2. DISTANCE = 50mm + [UNIT S.P. (Pa.) × 0.1 (mm/Pa.)]
   (UNIT S.P. IS THE TOTAL UNIT STATIC PRESSURE IN Pa.)

2 TYP M9 TYPICAL CONDENSATE DRAIN DETAIL

NOT TO SCALE

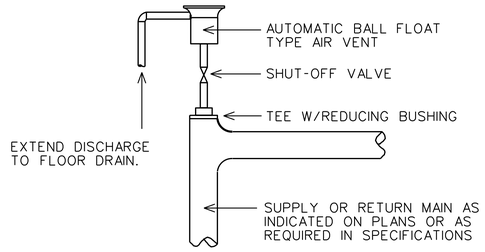

3 TYP M9 AUTOMATIC AIR VENT

NOT TO SCALE

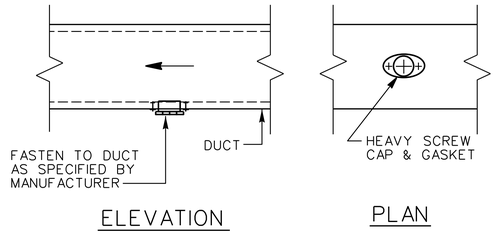

4 TYP M9 DUCT TEST HOLE DETAIL

NOT TO SCALE

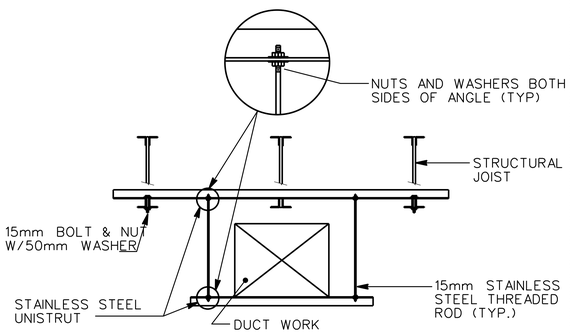

5 TYP M9 HANGAR FOR STAINLESS STEEL DUCT

NOT TO SCALE

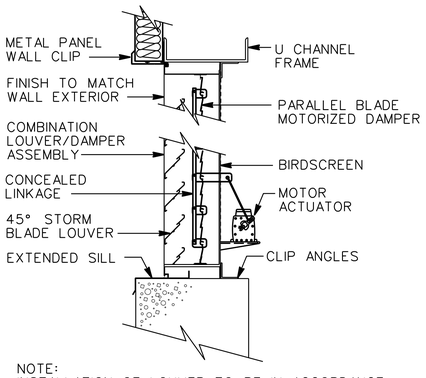

NOTE:
INSTALLATION OF LOUVER TO BE IN ACCORDANCE WITH LOUVER MANUFACTURER'S RECOMMENDATIONS.

6 TYP M9 LOUVER/DAMPER DETAIL

NOT TO SCALE

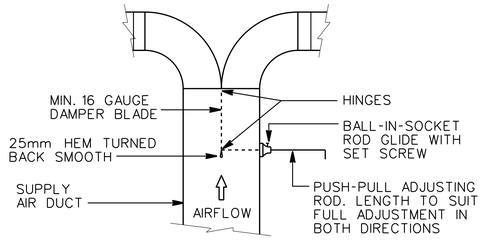

NOTES:
1. PROVIDE TWO ADJUSTING RODS FOR DUCTS OVER 50mm DEEP.
2. D1 AND D2 ARE THE LINEAR WIDTH OF THEIR RESPECTIVE DUCT.
3. DAMPER BLADE SHALL BE 1.5×THE SMALLER OF D1 AND D2 AND SHALL BE THE FULL DEPTH OF THE DUCT.

7 TYP M9 TYPICAL SPLITTER DAMPER DETAIL

NOT TO SCALE

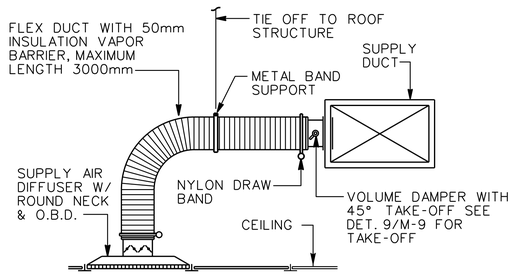

8 TYP M9 SUPPLY AIR DIFFUSER DETAIL

NOT TO SCALE

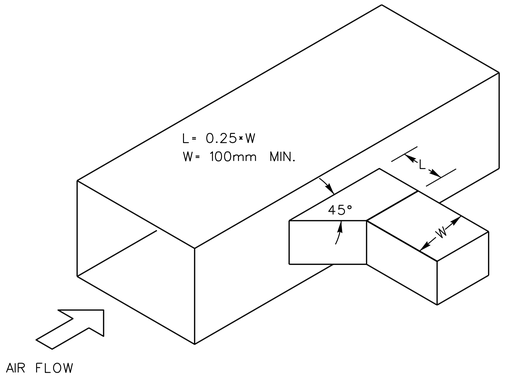

9 TYP M9 TYPICAL BRANCH DUCT TAKE-OFF

NOT TO SCALE

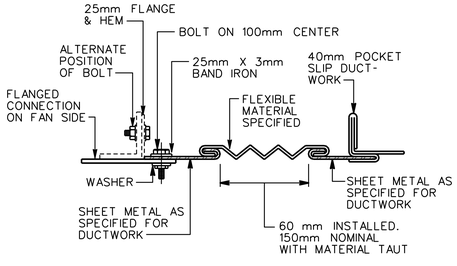

10 TYP M9 FLEXIBLE CONNECTOR

NOT TO SCALE

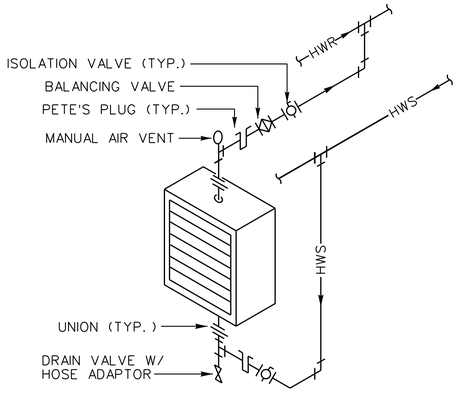

11 TYP M9 HOT WATER UNIT HEATER DETAIL

NOT TO SCALE

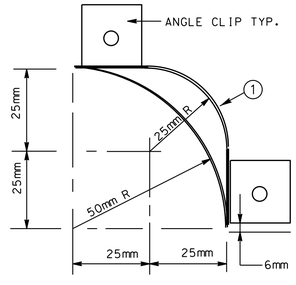

KEYED NOTES:

1. DOUBLE THICKNESS TURNING VANES ARE TO BE INSTALLED FOR VANES OVER 914mm IN LENGTH.

12 TYP M8 TYPICAL TURNING VANE

NOT TO SCALE

US ARMY CORPS OF ENGINEERS SAVANNAH DISTRICT

DATE: 14JUL97	REV.
CATEGORY CODE 721-11-11	
SOLICITATION NO: DACA21-97-B-0055	
PLOT DATE: $$DATE$$$$$$	
PLOT SCALE: 1	

CONTRACT NO: DACA21-98-C-0022

U.S. ARMY ENGINEER DISTRICT
CORPS OF ENGINEERS
SAVANNAH, GEORGIA

SYMBOL	DESCRIPTION	DATE	BY
1	AS BUILT	30SEP04	DGC
2	ADD TEXT TO NOTE 2, DETAIL 2	30JUL97	SWW

RANGER BARRACKS COMPLEX
FORT BENNING, GEORGIA

DINING FACILITY

HVAC DETAILS

PLATE REFERENCE NUMBER:
M-9
SHEET 331

RECORD DRAWING

DESIGN FILE: DGNSPEC$$$$$$

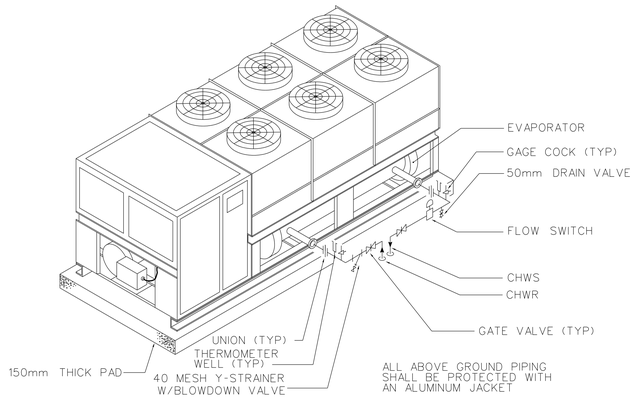

1 TYP M10 AIR COOLED CHILLER DETAIL

NOT TO SCALE

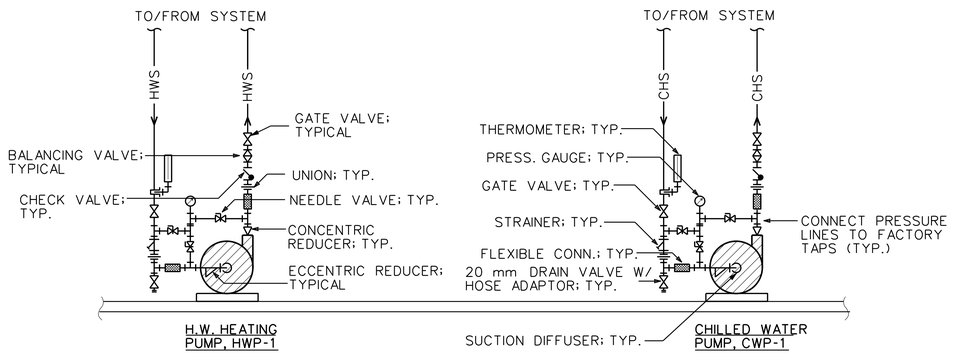

2 M7 M10 CHILLED AND HEATING WATER PUMP SCHEMATIC

NOT TO SCALE

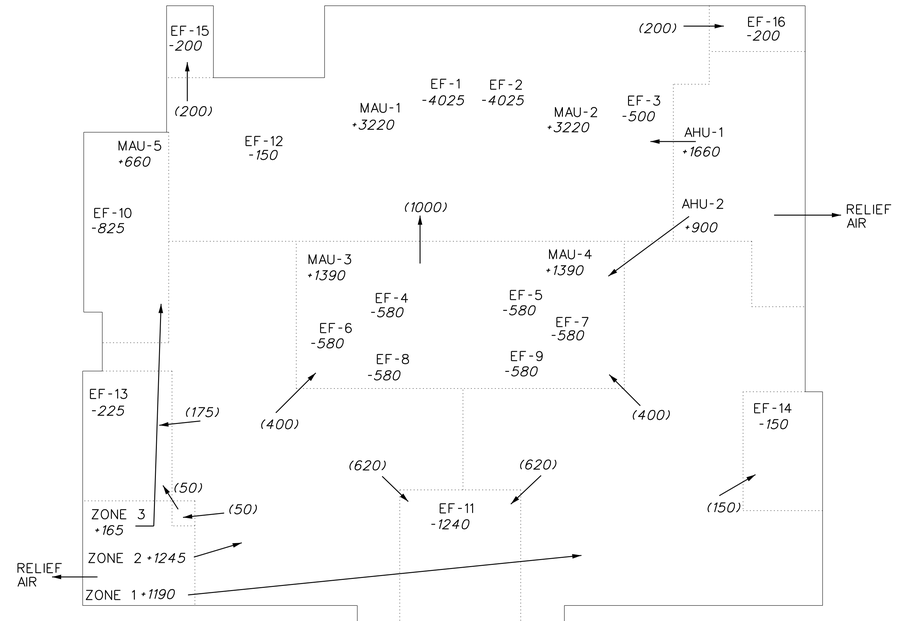

OUTSIDE AIR AND RELATIVE BUILDING PRESSURIZATION DIAGRAM NOTES:

1. ALL AIRFLOWS SHOWN ARE IN L/s.
2. WHEN EF-4, EF-5, EF-6, EF-7, EF-8 AND EF-9 ARE NOT OPERATING, AHU-2 OPERATES IN THE MINIMUM OUTSIDE AIR POSITION OF 300 L/s.
3. NOTATION: +XXX = XXX L/S OF OUTSIDE AIR IS INTRODUCED.
   -YYY = YYY L/S OF AIR IS EXHAUSTED AT THIS POINT.
   (ZZZ) = ZZZ L/S OF AIR IS TRANSFERED.
4. ALL RELIEF AIR DAMPERS WILL BE SET AT 12.5 Pa.

3 TYP M10 OUTSIDE AIR AND RELATIVE BUILDING PRESSURIZATION DIAGRAM

NOT TO SCALE

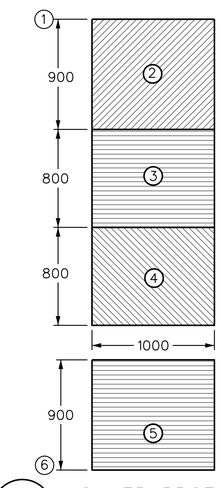

KEYED NOTES:

1. MOUNT TOP OF LOUVER NO FURTHER THAN 300mm FROM THE BOTTOM OF THE ROOF.
2. 900 X 1000 COMBUSTION AIR LOUVER.
3. 800 X 1000 LOUVER WITH BAROMETRIC DAMPER. SET DAMPER AT 12.5 Pa.
4. 800 X 1000 LOUVER WITH MOTORIZED DAMPER. INTERLOCK DAMPER WITH SF-01 OPERATION. SEE SHEET MC-7 FOR CONTROLS.
5. 900 X 1000 COMBUSTION AIR LOUVER.
6. MOUNT BOTTOM OF LOUVER NO FURTHER THAN 300mm A.F.F.

4 M7 M10 LOUVER PROFILE

NOT TO SCALE

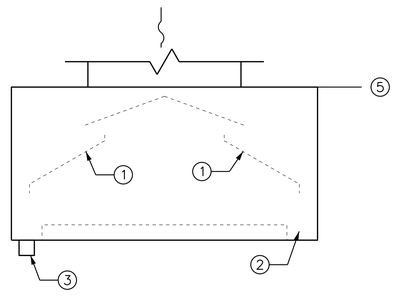

KEYED NOTES:

1. REMOVABLE CONDENSATE BAFFLE. NUMBER AS REQUIRED BY MFG.
2. CONDENSATE GUTTER
3. DRAIN FITTING. RUN DRAIN LINE FULL SIZE TO FLOOR SINK.
4. ALL HOOD COMPONENTS SHALL BE CONSTRUCTED OF STAINLESS STEEL WITH LIQUID TIGHT WELDS.
5. INSTALL HOOD WITH TOP AT OR ABOVE THE CEILING.

5 TYP M10 CONDENSATE HOOD CONSTRUCTION

NOT TO SCALE

KEYED NOTES:

1. AIR FROM EXHAUST HOOD
2. AIR TO EXHAUST FAN
3. ANGLE SHALL BE NO GREATER THAN 15° (TYP.).

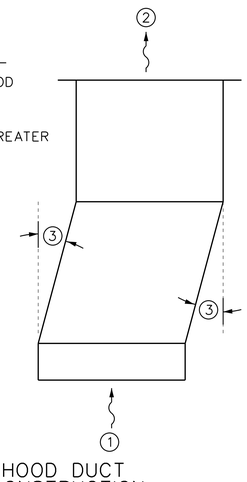

6 TYP M10 EXHAUST HOOD DUCT OFFSET CONSTRUCTION

NOT TO SCALE

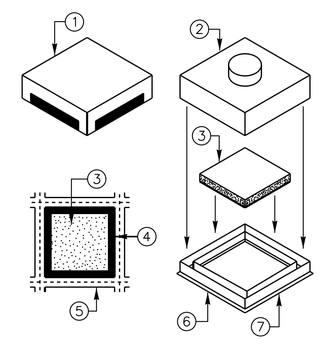

KEYED NOTES:

1. LIGHT BLOCKING CASING FOR RETURN AIR. INTERIOR SURFACES ARE FACTORY PAINTED BLACK.
2. OUTER CASING FOR SUPPLY AIR
3. CEILING TILE INSERT TO MATCH SURROUNDING TILE. INSERT TO BE FABRICATED BY CEILING MANUFACTURER.
4. SLOTS
5. T-BAR FOR CEILING GRID
6. SECURE DEVICE TO CEILING GRID
7. FRAME AND SLOT ASSEMBLY

7 TYP M10 SUPPLY DIFFUSER AND RETURN GRILLE CONSTRUCTION DETAIL

NOT TO SCALE

US ARMY CORPS OF ENGINEERS SAVANNAH DISTRICT

DATE: 14-JUL-97 | REV.
CATEGORY CODE 721-11-11
SOLICITATION NO: DACA21-97-B-0055
PLOT DATE: $$DATE$$$$$$
PLOT SCALE: :
CONTRACT NO: DACA21-98-C-0022

U.S. ARMY ENGINEER DISTRICT CORPS OF ENGINEERS SAVANNAH, GEORGIA

SYMBOL	DESCRIPTION	DATE	BY
AS BUILT		30SEP04	DGC

RANGER BARRACKS COMPLEX FORT BENNING, GEORGIA

DINING FACILITY

HVAC DETAILS

PLATE REFERENCE NUMBER: M-10

SHEET 332

RECORD DRAWING

DESIGN FILE: DONSPEC$$$$$$

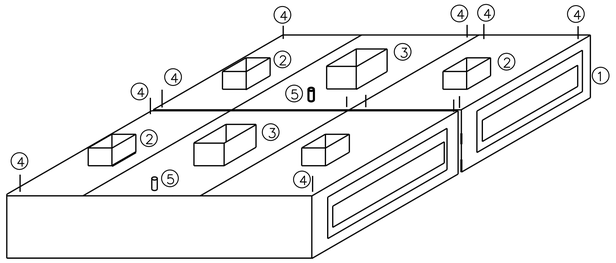

1. FIXED LOUVER SUPPLY HORIZONTAL DISCHARGE
2. SUPPLY AIR DUCT COLLAR
3. EXHAUST DUCT COLLAR
4. SUPPORTING ELEMENTS TIE TO STRUCTURE AOVE
5. WATER WASH PIPING STUB OUT

1 TYP M11 ISLAND TYPE CANOPY HOOD
NOT TO SCALE

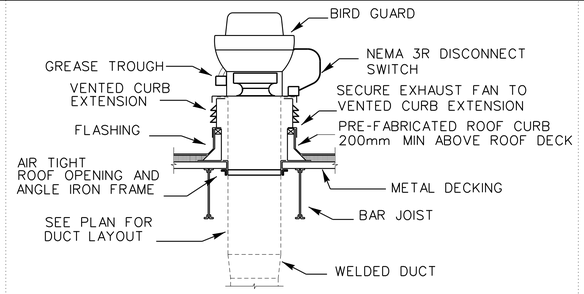

NOTES:
1. FAN CURB AND FLASHING SHALL MATCH COLOR OF ROOF.
2. PROVIDE HINGED CONNECTION IN ACCORDANCE WITH NFPA 96-1994 PARAGRAPH 4-8.2.1.
3. MINIMUM DISCHARGE HEIGHT 1000mm ABOVE ROOF DECK

2 TYP M11 UPBLAST EXHAUST FAN FOR GREASE LAIDEN AIR INSTALLATION
NOT TO SCALE

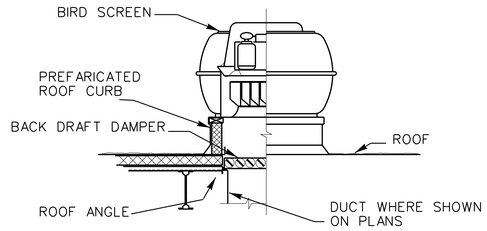

3 TYP M11 EXHAUST FAN FOR NON-GREASE LAIDEN AIR
NOT TO SCALE

1. SUPPLY GRILLE FIXED LOUVER TYP.
2. FUSIBLE LINK DAMPER IN SUPPLY DUCT
3. WATER WASH PIPING AND WATER FLOW NOZZLES
4. NOT USED
5. RECESSED FLUORESCENT LIGHTING TYP.
6. FIRE SUPPRESSION PIPING
7. DAMPER RESET LEVER
8. GREASE COLLECTION TROUGH WITH DRAIN

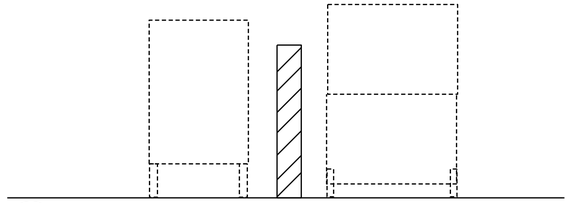

4 TYP M11 ISLAND TYPE CANOPY HOOD SECTION
NOT TO SCALE

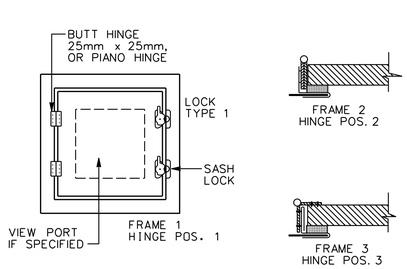

DUCT PRESSURE CLASS	DOOR SIZE	NO. HINGES	NO. LOCKS	METAL GAGE		
				FRAME	DOOR	BACK
500 PASCAL STATIC AND LESS	300mm x 300mm 400mm x 500mm 600mm x 600mm	2 2 3	1-S 2-S 2-S	24 22 22	26 24 22	26 26 26
750 PASCAL STATIC	300mm x 300mm 400mm x 500mm 600mm x 600mm	2 2 3	1-S 1-S,1-T,1-B 2-S,1-T,1-B	22 20 20	22 20 20	26 26 24
1000 PASCAL TO 2500 PASCAL	300mm x 300mm 400mm x 500mm 600mm x 600mm	2 3 3	1-S,1-T,1-B 2-S,1-T,1-B 2-S,2-T,2-B	20 18 18	20 18 18	26 24 24
S = SIDE OPPOSITE HINGES, T = TOP, B = BOTTOM						

PANEL IS DUCT GAGE (MIN.) WITH SCREWS AT 200mm MAX. SPACING

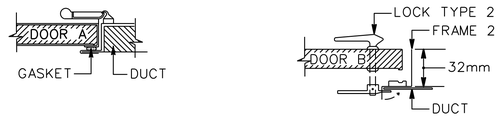

5 TYP M11 DUCT ACCESS DOOR DETAIL
NOT TO SCALE

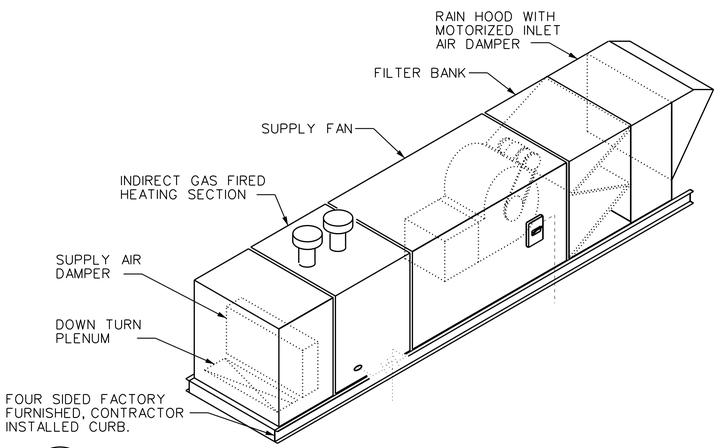

GENERAL NOTES:

1. PIPING AND CONDUIT SHALL PENETRATE ROOF INSIDE CURB AS SHOWN AND REMAIN INSIDE THE UNIT.
2. UNIT SHALL HAVE A WEATHER-PROOF HOUSING.

6 TYP M11 MAKE-UP AIR UNIT WITH GAS FURNACE
NOT TO SCALE

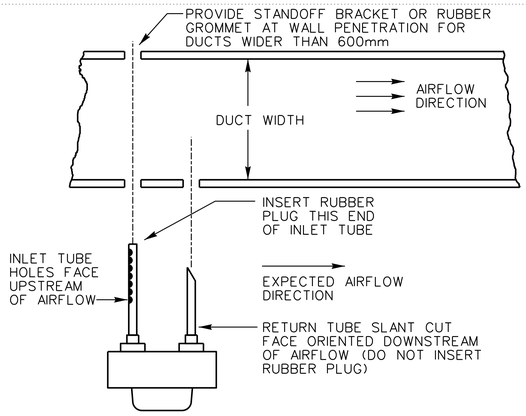

INSTALLATION NOTE:
MOUNT 6 TO 10 DUCT DIAMETERS DOWN/UPSTREAM OF ANY FITTING/COIL/DAMPER/FILTER

7 TYP M11 DUCT SMOKE DETECTOR
NOT TO SCALE

VIBRATION ISOLATOR SCHEDULE

EQUIPMENT TYPE	SLAB ON GRADE			OTHER		
	BASE TYPE	ISOLATOR TYPE	MIN. DEFL.	BASE TYPE	ISOLATOR TYPE	MIN. DEFL.
PUMPS UP TO 5.5kW	B	2	18mm	B	3	18mm
PUMPS UP TO 30kW	B	3	18mm	B	3	18mm
ROOFTOP AHU'S AND MAU'S	-	-	-	B	4	18mm
INDOOR AHU'S UP TO 7.5kW	A	2	5mm	A	3	18mm
INDOOR AHU'S OVER 7.5kW	A	2	5mm	A	3	38mm
TANK-MOUNTED AIR COMPRESSOR	A	3	18mm	A	3	38mm
CENTRIFUGAL FAN UP TO 560mm DIA.	-	-	-	A/B	3	18mm
CENTRIFUGAL FAN OVER 560mm DIA.	-	-	-	B	3	38mm

BASE TYPES:
A = NO BASE, ISOLATOR ATTACHED DIRECTLY TO EQUIPMENT
B = STRUCTURAL STEEL RAILS OR FRAME

ISOLATOR TYPES:
1 = NEOPRENE OR FIBERGLASS PAD
2 = HIGH DEFLECTION NEOPRENE OR FIBERGLASS ELEMENT
3 = SPRING MOUNT OR HANGER
4 = RESTRAINED SPRING ISOLATOR

US ARMY CORPS OF ENGINEERS SAVANNAH DISTRICT

DATE: 14JUL97 | REV.
CATEGORY CODE 721-11-11
SOLICITATION NO: DACA21-97-B-0055
PLOT DATE: $$DATE$$$$$$
PLOT SCALE: :
CONTRACT NO: DACA21-98-C-0022

U.S. ARMY ENGINEER DISTRICT CORPS OF ENGINEERS SAVANNAH, GEORGIA

SYMBOL	DESCRIPTION	DATE	BY
2	AS BUILT	30SEP04	DGC
1	REMOVED NOTE 4 FROM DETAIL 4	08AUG97	SWW

RANGER BARRACKS COMPLEX
FORT BENNING, GEORGIA
DINING FACILITY
HVAC DETAILS

PLATE REFERENCE NUMBER:
M-11
SHEET 333

RECORD DRAWING

DGNSPEC$$$$$$

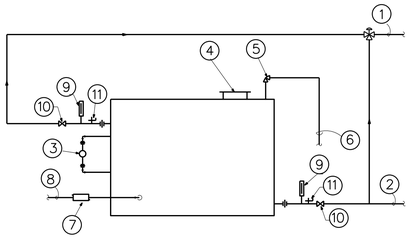

1. HHWS
2. HHWR
3. LOW WATER CUTOFF
4. FLUE GAS OUTLET FLANGE
5. RELIEF VALVE, SET AT 210 kPa
6. TURN DOWN OVER FLOOR DRAIN, FULL SIZE OF VALVE CONN.
7. GAS TRAIN & PIPING
8. SEE PLBG. DWG. FOR CONT.
9. THERMETER
10. GATE VALVE
11. COMBINATION PRESSURE/TEMPERATURE TEST PART.
12. 3 WAY CONTROL VALVE SEE CONTROL DRAWINGS.

1 TYP M12 GAS-FIRED HOT WATER BOILER PIPING DETAIL

NOT TO SCALE

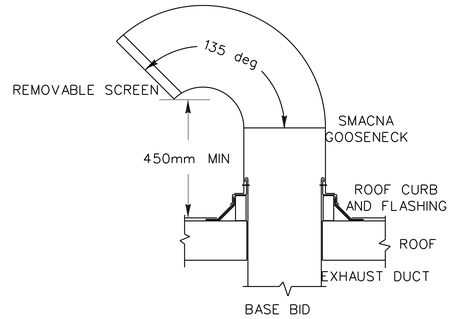

2 TYP M12 ROOF MOUNT GOOSENECK DETAIL

NOT TO SCALE

US ARMY CORPS OF ENGINEERS SAVANNAH DISTRICT

DATE: 14JUL97 | REV.

CATEGORY CODE 721-11-11

SOLICITATION NO: DACA21-97-B-0055

PLOT DATE: $$DATE$$$$$$

PLOT SCALE: :

CONTRACT NO: DACA21-98-C-0022

U.S. ARMY ENGINEER DISTRICT CORPS OF ENGINEERS SAVANNAH, GEORGIA

SYMBOL	DESCRIPTION	BY	DATE
	AS BUILT		
1	SHEET ADDED BY AMENDMENT 0001	SWW	30JUL97
		DGC	30SEP04

RANGER BARRACKS COMPLEX
FORT BENNING, GEORGIA

DINING FACILITY

HVAC DETAILS

PLATE REFERENCE NUMBER: M-12

SHEET 334

RECORD DRAWING

DESIGN FILE: DGNSPEC$$$$$$

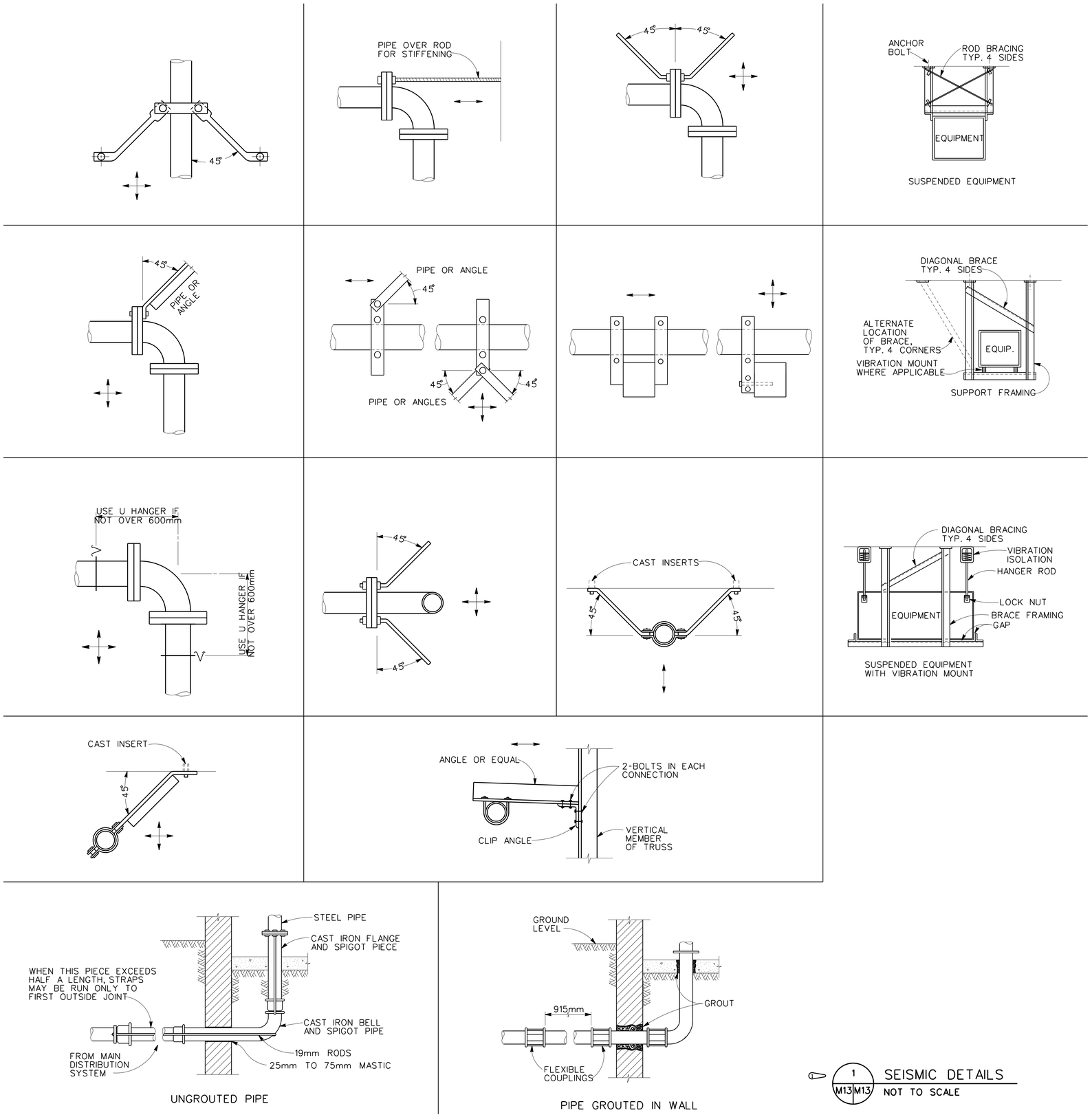

1 / M13 M13 SEISMIC DETAILS
NOT TO SCALE

US ARMY CORPS OF ENGINEERS
SAVANNAH DISTRICT

DATE: 14JUL97	REV.
CATEGORY CODE 721-11-11	
SOLICITATION NO: DACA21-97-B-0055	
PLOT DATE: $$DATE$$$$$$	
PLOT SCALE: 1	

CONTRACT NO: DACA21-98-C-0022

U.S. ARMY ENGINEER DISTRICT
CORPS OF ENGINEERS
SAVANNAH, GEORGIA

SYMBOL	DESCRIPTION	DATE	BY
1	AS BUILT	30SEP04	DGC
1	ADDED TITLE FOR SEISMIC DETAILS	30JUL97	SWW

RANGER BARRACKS COMPLEX
FORT BENNING, GEORGIA

DINING FACILITY

SEISMIC DETAILS

PLATE REFERENCE NUMBER:
M-13
SHEET 335

DESIGN FILE: DONSPEC$$$$$$

XXXX XX-XX — FIELD-MOUNTED DEVICE

UPPER FIELD OF UNIQUE IDENTIFIER FOR DEVICE

LOWER FIELD OF UNIQUE IDENTIFIER FOR DEVICE

XXXX XX-XX — HVAC CONTROL-PANEL-MOUNTED DEVICE

2-DIGIT IDENTIFIER FOR SPECIFIC DEVICE

XX-XX

2-DIGIT SYSTEM IDENTIFIER

LOWER FIELD OF UNIQUE IDENTIFIER FOR DEVICE

MAXIMUM OF 4 ALPHABETICAL CHARACTERS FOR DEVICE TYPE — 'XXXX'

UPPER FIELD OF UNIQUE IDENTIFIER FOR DEVICE

CLK XX-XX — TIME CLOCK

DPS XX-XX — DIFFERENTIAL-PRESSURE SWITCH

DPI XX-XX — DIFFERENTIAL-PRESSURE INDICATOR

EC XX-XX — ECONOMIZER CONTROLLER

EP XX-XX — ELECTRIC-SOLENOID-ACTUATED PNEUMATIC VALVE

IP XX-XX — CURRENT-TO-PNEUMATIC TRANSDUER

FS XX-XX — WATER FLOW SWITCH

LD XX-XX — LOOP DRIVER

MPS XX-XX — MINIMUM-POSITION SWITCH

PI XX-XX — PANEL-MOUNTED PRESSURE GAUGE

PL XX-XX — PANEL-MOUNTED PILOT LIGHT

SMK XX-XX — SMOKE DETETOR, DUCT-MOUNTED (SEE DETAIL 7, SHEET M-11)

SQCR XX-XX — SEQUENCER

T XX-XX — MODULATING SPACE THERMOSTAT

TC XX-XX — TEMPERATURE CONTROLLER

TI XX-XX — THERMOMETER, AVERAGING

TI XX-XX — THERMOMETER, NON-AVERAGING

TS XX-XX — NON-MODULATING SPACE THERMOSTAT, (MAKES CONTACT ON TEMPERATURE RISE)

TSH XX-XX — NON-MODULATING OUTSIDE AIR THERMOSTAT, (MAKES CONTACT ON TEMPERATURE RISE)

TSL XX-XX — NIGHT THERMOSTAT, NON-MODULATING SPACE THERMOSTAT (BREAKS CONTACT ON TEMPERATURE RISE)

TSL XX-XX — THERMOSTAT, LOW TEMPERATURE PROTECTION

TT XX-XX — TEMPERATURE TRANSMITTER

TT XX-XX — TEMPERATURE TRANSMITTER, AVERAGING

TT XX-XX — TEMPERATURE TRANSMITTER, DUCT-MOUNTED

TY XX-XX — SIGNAL SELECTOR

THERMOWELL

PI — FIELD-MOUNTED PRESSURE GAUGE

ELECTRIC LINES (LADDER DIAGRAMS AND SCHEMATICS)

ELECTRONIC SIGNALS (SCHEMATICS)

R XX-XX — RELAY COIL

XXX XX-XX, XX — CONTACT LOCATION — RELAY-COIL OR DEVICE OPERATING CIRCUIT

XXXX XX-XX — PANEL-DEVICE CONTACT

XXX XX-XX — FIELD-DEVICE CONTACT

R XX-XX — X — LADDER-DIAGRAM LINE # OF COIL — RELAY CONTACT

HS XX-XX — MAINTAINED-CONTACT INTERLOCKED SWITCHES

HAND / OFF / AUTO — MAGNETIC-STARTER LOCAL CONTROL SWITCH

FLOW-SWITCH CONTACT (MAKES ON WATER FLOW SENSED)

TEMPERATURE-SWITCH, CONTACT (MAKES ON TEMPERATURE RISE) (BREAKS ON TEMPERATURE FALL)

TEMPERATURE-SWITCH, CONTACT (BREAKS ON TEMPERATURE RISE) (MAKES ON TEMPERATURE FALL)

VLV XX-XX — C — NC — NO — VALVE, 3-WAY MIXING

VLV XX-XX — NC — VALVE, NORMALLY CLOSED

VLV XX-XX — NO — VALVE, NORMALLY OPEN

AD XX-XX — DAMPER, PARALLEL-BLADE WITH SEALS

AAD — DA XX-XX — ACTUATOR, ELECTRIC OR ELECTRONIC, WITH AUXILIARY ACTUATOR DRIVER

HVAC EQUIPMENT IDENTIFIER

C/C — COIL, COOLING

H/C — COIL, HEATING

D/F — MODULATING, INDIRECT GAS-FIRED HEATER

FILTER

PUMP — PUMP

SF — SUPPLY FAN

EF — EXHAUST FAN

CB — MAGNETIC-STARTER CIRCUIT BREAKER

FUSE — MAGNETIC-STARTER CONTROL-CIRCUIT FUSE

M — MOTOR

M01 — MAGNETIC-STARTER HOLDING COIL

L1 L2 X1 X2 — MAGNETIC-STARTER CONTROL-CIRCUIT TRANSFORMER

OL'S — MAGNETIC-STARTER OVERLOADS

M01-1 — MAGNETIC-STARTER POWER CONTACT

TRANSFORMER

O.L. — OVERLOAD RELAY THERMAL UNIT

GROUNDED

CPA	CONTROL POINT ADJUSTMENT
DTC	DATA TERMINAL CABINET
DIR	DIRECT ACTING
DEV	DEVIATION OF CONTROLLER
EMCS	ENERGY MONITORING CONTROL SYSTEM
Kv	CONTROL VALVE FLOW COEFFICIENT (m3/hr @ 100 kPa delta P)
NO	NORMALLY OPEN
NC	NORMALLY CLOSED
PV	PROCESS VARIABLE OF CONTROLLER
PVR	PROCESS VARIABLE RETRANSMISSION OUTPUT
REV	REVERSE ACTING

GENERAL NOTES:

1. CONTROLS SHALL BE ELECTRIC OR ELECTRONIC AS SHOWN. NO PNEUMATICS ARE TO BE USED.

2. VALVE KvS SHOWN ON DRAWINGS ARE FOR ESTIMATING PURPOSES ONLY AND ARE BASED ON DESIGN ASSUMPTIONS (COIL PRESSURE DROP, ETC.). CONTRACTOR SHALL VERIFY VALVE SIZES BASED ON ACTUAL INSTALLED CONDITIONS AND INCLUDE SIZING CALCULATIONS WITH SUBMITTALS.

US ARMY CORPS OF ENGINEERS SAVANNAH DISTRICT

DESIGNED BY:
SUBMITTED BY:
CHIEF, MECHANICAL SECTION
RECOMMENDED:
CHIEF, DESIGN BRANCH

DATE: 14JUL97 | REV.
CATEGORY CODE 721-11-11
SOLICITATION NO: DACA21-97-B-0055
PLOT DATE: $$DATE$$$$$
PLOT SCALE:
CONTRACT NO DACA21-98-C-0022

U.S. ARMY ENGINEER DISTRICT CORPS OF ENGINEERS SAVANNAH, GEORGIA

SYMBOL	DESCRIPTION	BY
AS BUILT		
	30SEP04	DGC
	DATE	BY

RANGER BARRACKS COMPLEX
FORT BENNING, GEORGIA
DINING FACILITY

HVAC CONTROLS LEGEND

PLATE REFERENCE NUMBER:
MC-1
SHEET 336

DESIGN FILE: DGNSPEC$$$$$

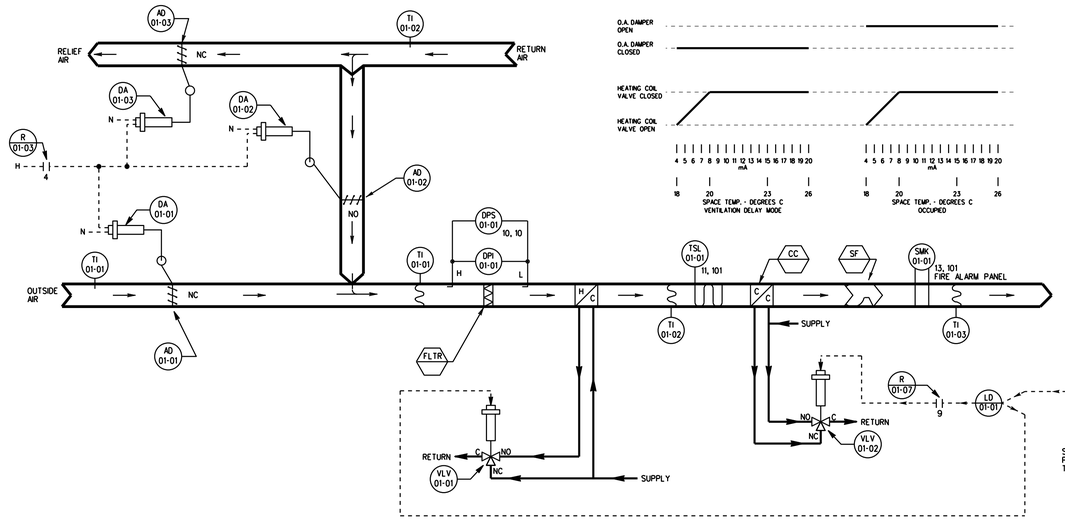

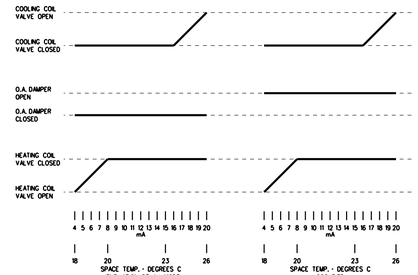

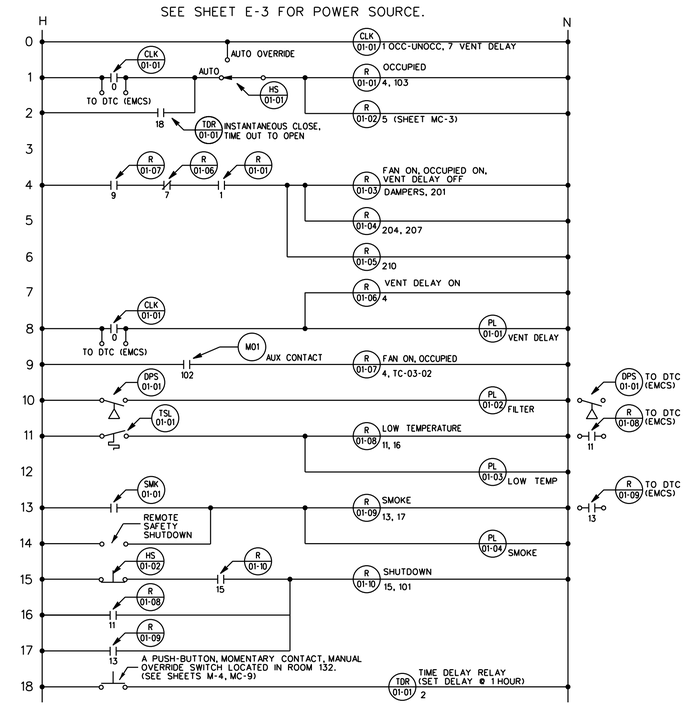

AIR HANDLING UNIT CONTROL PANEL

Single Zone Unit AHU-1 Sequence of Operation

Occupied, Unoccupied and Ventilation-Delay Modes:
Ventilation-delay mode timing shall start prior to the occupied-mode timing. The time clock shall close a contact, which shall turn on the ventilation-delay pilot light and energize a relay which shall prevent the outside air damper from opening. At the time shown, the clock shall close another contact which shall turn on the occupied mode pilot light and shall place the control system in the occupied mode of operation. At the expiration of the ventilation-delay mode timing period, the time clock shall open the contact to turn off the ventilation-delay mode pilot light and de-energize a relay to allow the outside air damper to open. At the time shown, the time clock shall open the contact to turn off the occupied mode pilot light and shall place the control system in the unoccupied mode of operation.

Outside-air, Return-air, and Relief-air Damper Control:
Occupied mode: The outside-air and relief-air dampers shall open fully and the return-air damper shall close.

Unoccupied and Ventilation-delay modes: The outside-air, return-air and relief-air dampers shall return to their normal positions as shown.

Supply fan control:
Occupied and ventilation-delay modes: Supply fan shall start and shall run continuously.
Unoccupied mode: The supply fan shall cycle from a night-thermostat. The fans shall start at and stop at the setpoints as shown.

Heating and cooling coil control:
A space-temperature sensing element and transmitter operating through a space-temperature controller shall maintain the setpoint by sequencing the valves as shown. On a rise in space temperature, the space-temperature controller shall first gradually close the heating-coil valve. After the controller output passes through a deadband, the controller shall then gradually open the cooling-coil valve; except that, during Unoccupied mode, the cooling coil valve shall remain closed.

Filter:
A differential-pressure switch across the filter shall turn on the filter pilot light when the pressure drop across the filter reaches the setpoint.

Freeze Protection:
All Modes - A freezestat, located as shown, shall stop the supply fan, cause the outside air, return air, and relief air dampers to return to their normal position as shown, and shall turn on the low-temperature pilot light in the HVAC control panel if the temperature drops below the freezestat's setpoint as shown. Return to the normal mode of operation shall require manual reset at the freezestat and at the HVAC control panel.

Emergency Fan Shutdown:
Activation of a duct smoke detector in the supply-air ductwork, or activation of a manual emergency fan shutdown switch shall cause the associated fan to shutdown in accordance with NFPA 90A. Activation of these devices shall operate a pilot light on the HVAC control panel. The panel shall require manual resetting after the detector and the manual switch are reset.

Exhaust fans EF-3, EF-12, EF-15 & EF-16:
Exhaust fans EF-3, EF-12 and EF-15 shall run continuously whenever AHU-1 is operating in occupied mode and ventilation-delay mode is off.
Exhaust fan EF-16 shall run continuously.

1

LOOP CONTROL FUNCTION	DEVICE NUMBER	DEVICE FUNCTION	SETPOINT	RANGE	ADDITIONAL PARAMETERS
SPACE TEMPERATURE	DA-01-01 DA-01-02 DA-01-03	DAMPER ACTUATOR	——	TWO-POSITION	——
	DPS-01-01	FILTER ALARM	PER FILTER MANUFACTURER'S RECOMMENDATION	PER FILTER MANUFACTURER'S RECOMMENDATION	——
	VLV-01-01	HEATING COIL VALVE	——	4 - 8 mA	Kv = 21 CLOSE AGAINST 25 kPa
	VLV-01-02	COOLING COIL VALVE	——	16 - 20 mA	Kv = 15 CLOSE AGAINST 130 kPa
	TC-01-01	SPACE TEMPERATURE CONTROLLER	24°C	10 TO 30 °C	——
	TT-01-01	SPACE TEMPERATURE TRANSMITTER	——	10 TO 30 °C	——
MIXED AIR TEMPERATURE	TSL-01-01	LOW TEMPERATURE PROTECTION THERMOSTAT	4°C	2.8°C DIFFERENTIAL	——
SPACE LOW TEMPERATURE	TSL-01-02	NIGHT STAT - SPACE LOW TEMPERATURE PROTECTION	13°C	2.8°C DIFFERENTIAL	——
OCCUPIED MODE	CLK-01-01 CONTACT	365 DAY SCHEDULE	——	WEEKDAY SCHEDULE CLOSED: 0600 HRS OPEN: 2000 HRS	SAT, SUN, HOLIDAY SCHEDULE
VENTILATION DELAY MODE	CLK-01-01 CONTACT	365 DAY SCHEDULE	——	WEEKDAY SCHEDULE CLOSED: 0600 HRS OPEN: 0700 HRS	

NOTE: OTHER CONTROL DEVICES SUCH AS I/Ps, RELAYS, AND SIGNAL SELECTERS ARE NOT SHOWN.

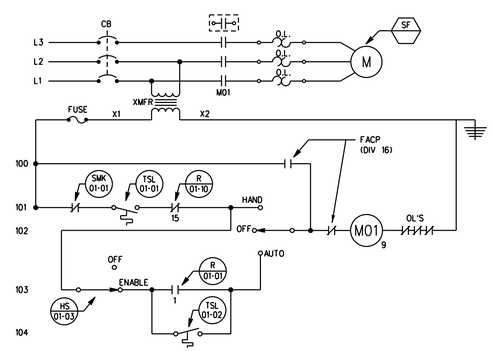

SUPPLY FAN STARTER

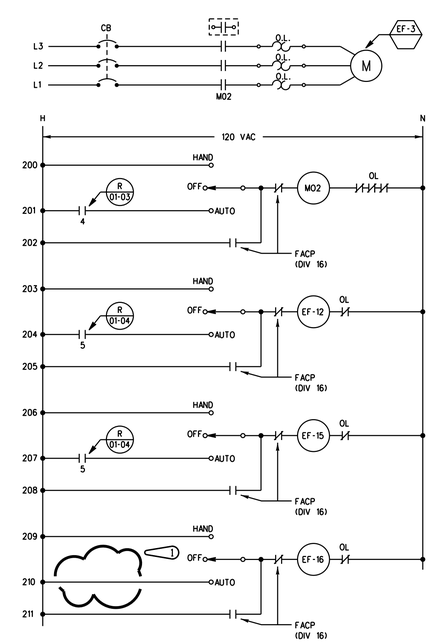

EXHAUST FAN STARTERS

US ARMY CORPS OF ENGINEERS SAVANNAH DISTRICT

DATE: 14JUL97
REV.
CATEGORY CODE 721-11-11
SOLICITATION NO: DACA21-97-B-0055
PLOT DATE: $$DATE$$$$$
PLOT SCALE:
CONTRACT NO DACA21-98-C-0022

U.S. ARMY ENGINEER DISTRICT
CORPS OF ENGINEERS
SAVANNAH, GEORGIA

SYMBOL	DESCRIPTION	DATE	BY
1	AS BUILT REVISED IN ACCORDANCE WITH MODIFICATION 98-22-H	30SEP04 17AUG98	DGC SWW

RANGER BARRACKS COMPLEX
FORT BENNING, GEORGIA

DINING FACILITY

HVAC CONTROLS AHU-1

PLATE REFERENCE NUMBER:
MC-2
SHEET 337

RECORD DRAWING

DESIGN FILE: DCNSPEC$$$$$

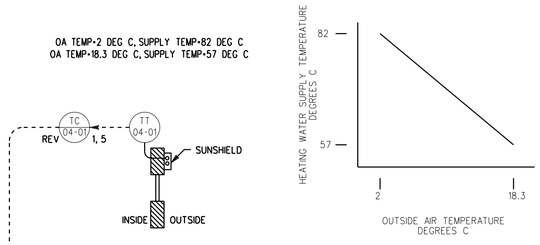

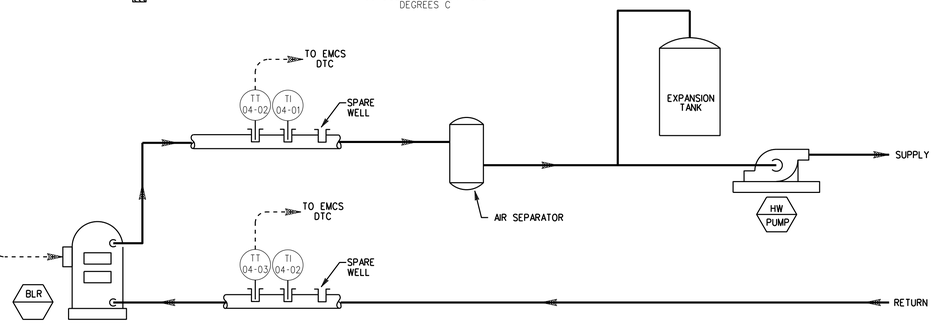

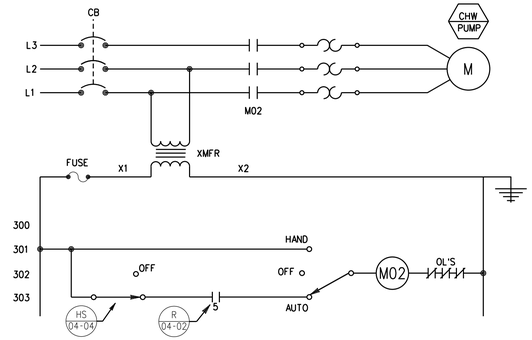

CHILLED-WATER PUMP STARTER

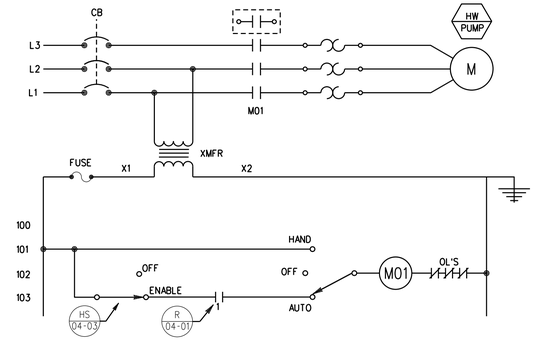

HOT-WATER PUMP STARTER

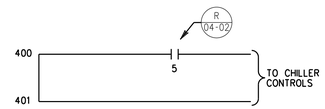

CHILLER INTERLOCK

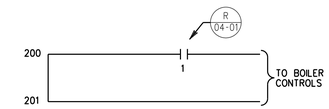

BOILER INTERLOCK

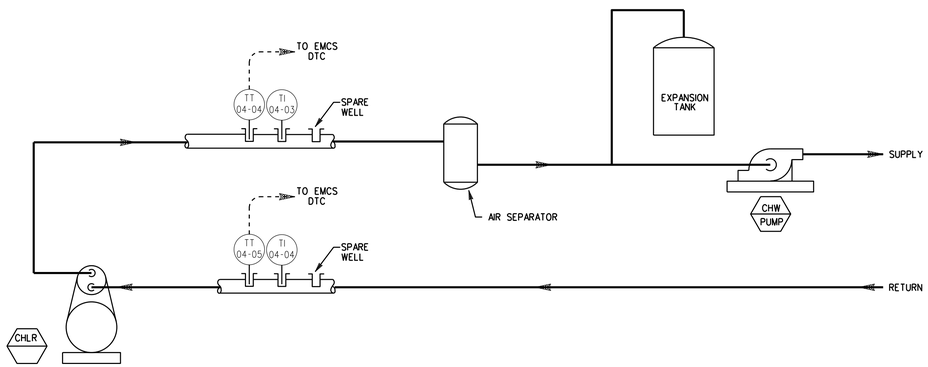

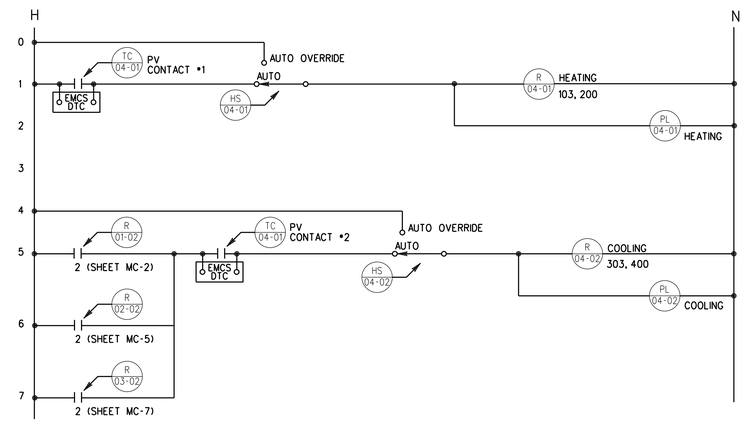

NOTE: PANEL-MOUNTED CONTROL DEVICES LABELED 04-XX ARE LOCATED IN CONTROL PANEL AHU-1. (SEE SHEET MC-4)

LOOP CONTROL FUNCTION	DEVICE NUMBER	DEVICE FUNCTION	SETPOINT	RANGE	ADDITIONAL PARAMETERS
HOT-WATER SUPPLY TEMPERATURE	TC-04-01	OUTSIDE-AIR RESET CONTROLLER	3.33 DEG C PROPORTIONAL BAND 62.5% MANUAL RESET 50% MIMMUM OUTPUT=0% MAXIMUM OUTPUT=53.3%	-35 TO +54 DEG C	PV CONTACT #1 CLOSED AT OA < 18.3 DEG C OPEN AT OA > 19.4 DEG C PV CONTACT #2 CLOSED AT OA > 16.7 DEG C OPEN AT OA < 15.6 DEG C
	TT-04-01	OUTSIDE-AIR TEMPERATURE TRANSMITTER	——	-35 TO +54 DEG C	——
	TT-04-02	HOT-WATER SUPPLY TEMPERATURE TRANSMITTER	——	38 TO 121 DEG C	——
	TT-04-03	HOT-WATER RETURN TEMPERATURE TRANSMITTER	——	38 TO 121 DEG C	——
TEMPERATURE CHILLED-WATER SUPPLY	TT-04-04	CHILLED-WATER SUPPLY TEMPERATURE TRANSMITTER	——	-1 TO +38 DEG C	——
	TT-04-05	CHILLED-WATER RETURN TEMPERATURE TRANSMITTER	——	-1 TO +38 DEG C	——

Hydronic systems sequence of operation

Heating system: The outside-air temperature reset controller shall accept a signal at its process variable input from a sunshielded outside-air temperature sensing element and transmitter located as shown. The outside-air temperature reset controller process variable relay contact #1 output shall start and stop the hot water pump [HWP-1] and the boiler at the outside-air temperatures shown. The analog output of the outside-air temperature controller shall send a signal to the remote setpoint input of the boiler control panel to reset the hydronic-heating supply temperature setpoint in a linear schedule based on the outside-air temperature as shown.

Cooling system: The outside-air temperature reset controller process variable relay contact #2 output shall start and stop the chilled water pump [CHP-1] and the chiller at the outside-air temperatures shown, provided that at least one air handler is operating in the occupied mode.

US ARMY CORPS OF ENGINEERS
SAVANNAH DISTRICT

DATE: 14JUL97
CATEGORY CODE 721-11-11
SOLICITATION NO: DACA21-97-B-0055
PLOT DATE: $$DATE$$$$$
PLOT SCALE: :
REV.
CONTRACT NO DACA21-98-C-0022

U.S. ARMY ENGINEER DISTRICT
CORPS OF ENGINEERS
SAVANNAH, GEORGIA

SYMBOL	DESCRIPTION	DATE	BY
AS BUILT		30SEP04	DGC

RANGER BARRACKS COMPLEX
FORT BENNING, GEORGIA

DINING FACILITY
HW & CHW SYSTEM
CONTROL SCHEMATICS

PLATE REFERENCE NUMBER:
MC-3
SHEET 338

RECORD DRAWING

DGNSPEC$$$$$

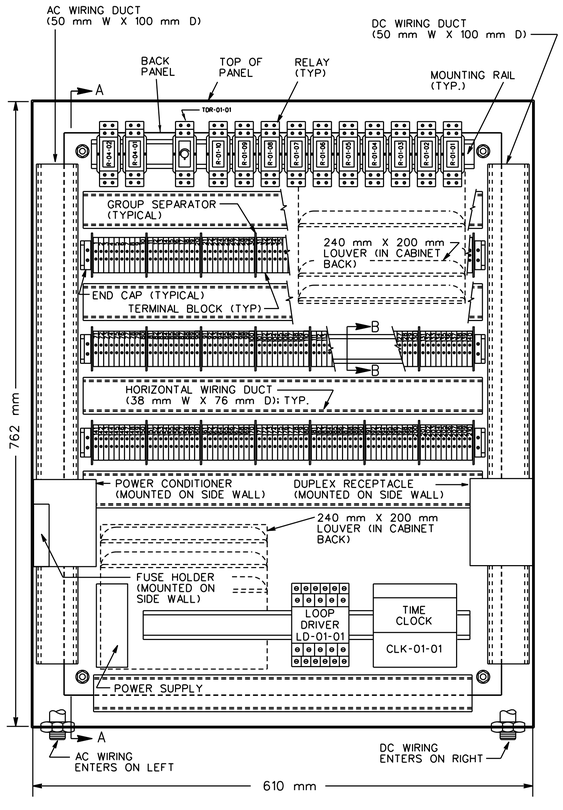

BACK PANEL LAYOUT FOR SYSTEM CONTROL PANEL

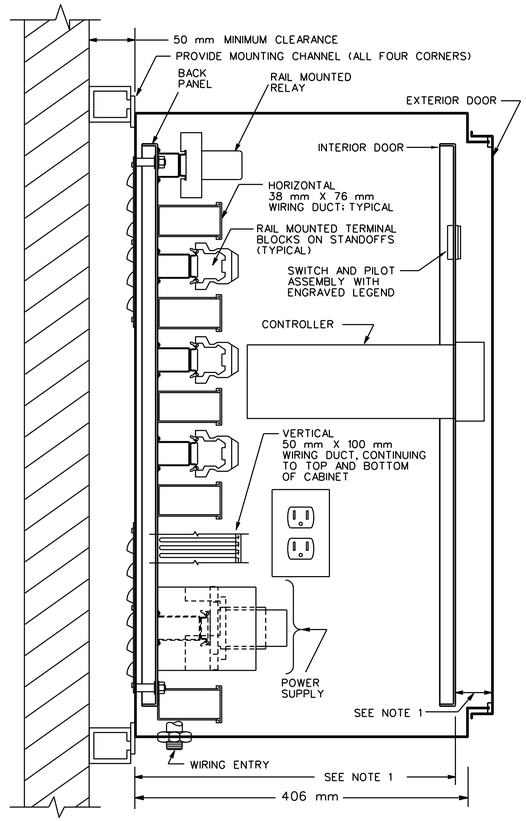

SECTION A-A

NOTES:

1. CONTROL PANEL SHALL BE CAPABLE OF ACCEPTING A CONTROLLER WHICH PROTRUDES 260 mm FROM THE REAR OF THE INNER DOOR AND 41 mm FROM THE FRONT OF THE INNER DOOR.
2. SEE SHEET E-3 FOR AC POWER SOURCE.

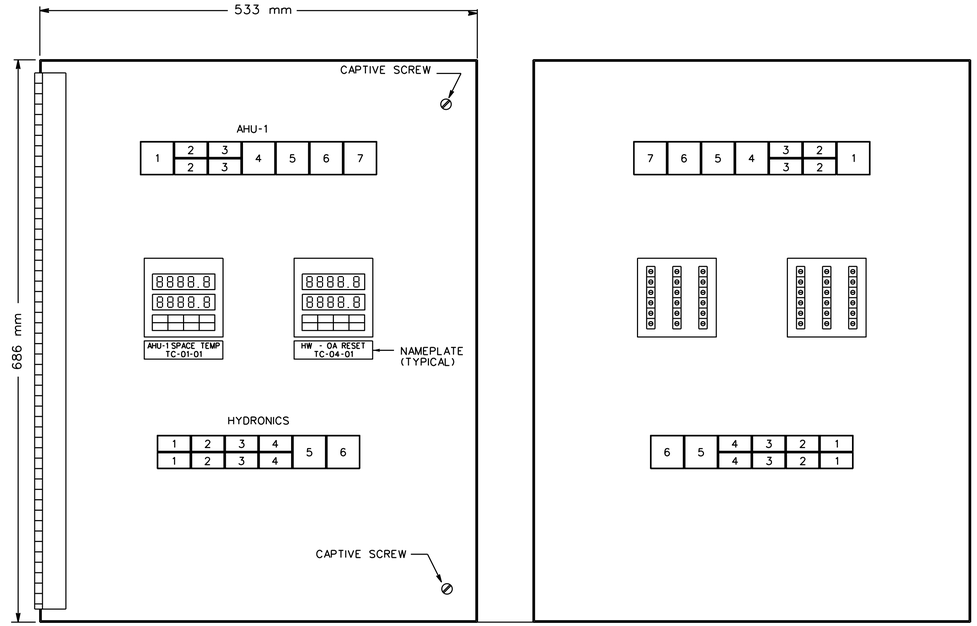

INTERIOR DOOR LAYOUT FOR SYSTEM CONTROL PANEL

INTERIOR DOOR LAYOUT FOR SYSTEM CONTROL PANEL (REAR VIEW)

AHU-1 SWITCH AND PILOT LIGHT LEGEND

POSITION LEGEND	DEVICE TYPE	IDENTIFIER
1 - RESET	NON-ILLUMINATED MOMENTARY CONTACT PUSH BUTTON SWITCH	HS-01-02
2 - AUTO/AUTO OVERRIDE	ILLUMINATED MAINTAINED CONTACT INTERLOCKED SWITCHES	HS-01-01
3 - SF ENABLE/OFF	ILLUMINATED MAINTAINED CONTACT INTERLOCKED SWITCHES	HS-01-03
4 - FILTER	PILOT LIGHT	PL-01-02
5 - VENT DELAY	PILOT LIGHT	PL-01-01
6 - LOW TEMP	PILOT LIGHT	PL-01-03
7 - SMOKE	PILOT LIGHT	PL-01-04

HYDRONICS SWITCH AND PILOT LIGHT LEGEND

POSITION LEGEND	DEVICE TYPE	IDENTIFIER
1 - HTG AUTO/AUTO OVERRIDE	ILLUMINATED MAINTAINED CONTACT INTERLOCKED SWITCHES	HS-04-01
2 - CLG AUTO/AUTO OVERRIDE	ILLUMINATED MAINTAINED CONTACT INTERLOCKED SWITCHES	HS-04-02
3 - HWP-1 ENABLE/OFF	ILLUMINATED MAINTAINED CONTACT INTERLOCKED SWITCHES	HS-04-03
4 - CHP-1 ENABLE/OFF	ILLUMINATED MAINTAINED CONTACT INTERLOCKED SWITCHES	HS-04-04
5 - HEATING	PILOT LIGHT	PL-04-01
6 - COOLING	PILOT LIGHT	PL-04-02

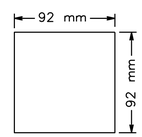

STANDARD CONTROLLER CUTOUT

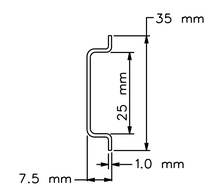

SECTION B-B
(TYPICAL FOR ALL MOUNTING RAILS)

1-10	11-20	21-30	31-40	41-50	51-60	61-70
RESERVE FOR CONTROLLER	TC-01-01 SPACE TEMP CONTROLLER AND EMCS SPACE TEMP PV RETRANS TERMINAL BLOCKS	TC-04-01 OA RESET CONTROLLER	RESERVE FOR CONTROLLER	RESERVE FOR CONTROLLER	RESERVE FOR CONTROLLER	SPACE

FIRST ROW OF TERMINAL BLOCKS

71-74	75-78	79-82	83-84	85-86	87-90	91-94	95-98	99-102	103-110	111-114	115-118	119-122	123-126	127-130	131-140
CLK-01-01 EMCS REPLACE-MENT	REMOTE SAFETY CONTACTS	TSL-01-01 AND EMCS CONTACTS	TSL -01 -02	SPACE	SMK-01-01 AND EMCS CONTACTS	DPS-01-01 AND EMCS CONTACTS	SPACE	SPACE	SPACE	SPACE	SPACE	SPACE	SPACE	SPACE	SPACE

SECOND ROW OF TERMINAL BLOCKS

141-160	171-180	181-190	191-210
120 V AC POWER DISTRIBUTION TERMINAL BLOCKS	24 V DC POWER DISTRIBUTION TERMINAL BLOCKS	SUPPLY FAN STARTER CONTROL WIRING TERMINAL BLOCKS	EXHAUST FAN & PUMP STARTERS CONTROL WIRING TERMINAL BLOCKS

THIRD ROW OF TERMINAL BLOCKS

CONTROL PANEL TERMINAL BLOCK LAYOUT

US ARMY CORPS OF ENGINEERS
SAVANNAH DISTRICT

DATE: 14JUL97
REV.
CATEGORY CODE 721-11-11
SOLICITATION NO: DACA21-97-B-0055
PLOT DATE: $$DATE$$$$$
PLOT SCALE: :
CONTRACT NO: DACA21-98-C-0022

U.S. ARMY ENGINEER DISTRICT
CORPS OF ENGINEERS
SAVANNAH, GEORGIA

SYMBOL	DESCRIPTION	DATE	BY
AS BUILT		30SEP04	DGC

RANGER BARRACKS COMPLEX
FORT BENNING, GEORGIA

DINING FACILITY
HVAC CONTROLS (AHU-1)
CONTROL PANEL DETAILS

PLATE REFERENCE NUMBER:
MC-4
SHEET 339

RECORD DRAWING

DESIGN FILE: DCNSPEC$$$$$

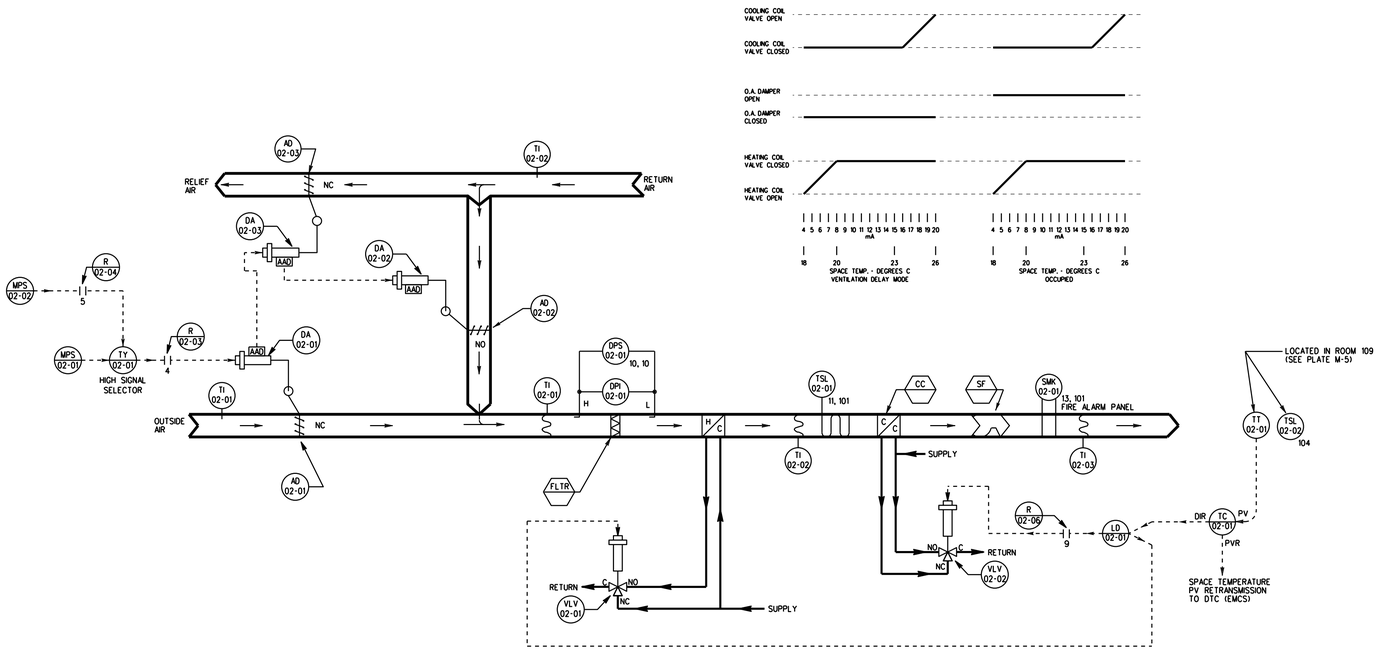

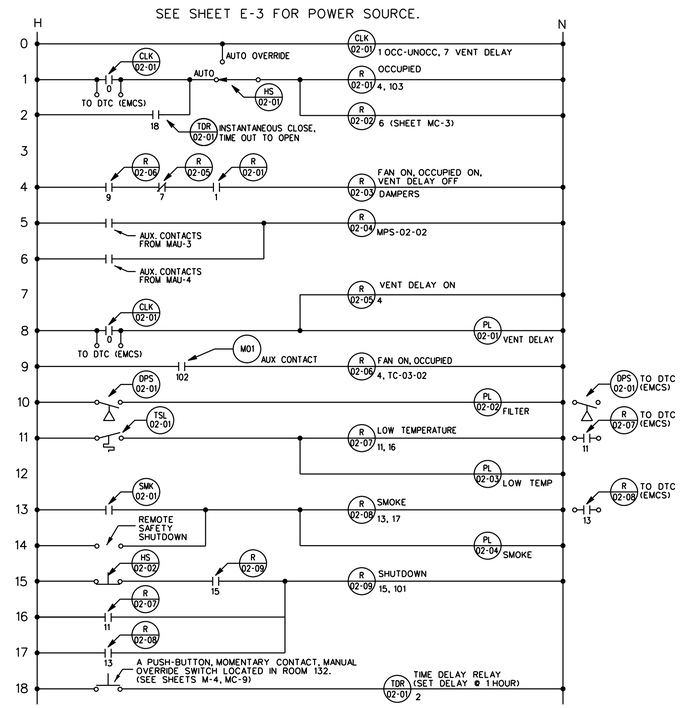

AIR HANDLING UNIT CONTROL PANEL

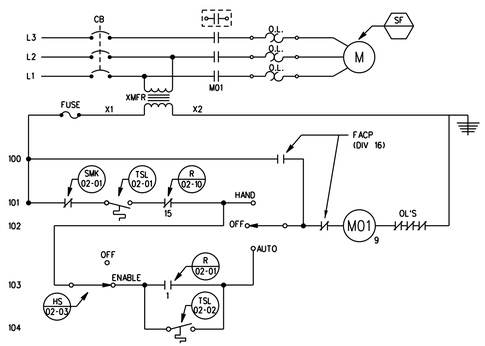

SUPPLY FAN STARTER

Single Zone Unit AHU-2 Sequence of Operation

Occupied, Unoccupied and Ventilation-Delay Modes:
Ventilation-delay mode timing shall start prior to the occupied-mode timing. The time clock shall close a contact, which shall turn on the ventilation-delay pilot light and energize a relay which shall prevent the outside air damper from opening. At the time shown, the clock shall close another contact which shall turn on the occupied mode pilot light and shall place the control system in the occupied mode of operation. At the expiration of the ventilation-delay mode timing period, the time clock shall open the contact to turn off the ventilation-delay mode pilot light and de-energize a relay to allow the outside air damper to open. At the time shown, the time clock shall open the contact to turn off the occupied mode pilot light and shall place the control system in the unoccupied mode of operation. Activation of a time-delay relay, thru a space mounted manual switch, shall place the system in the occupied mode for a period of one hour.

Outside-air, Return-air, and Relief-air Damper Control:
Occupied mode: If either make-up air unit MAU-3 or MAU-4 is operating, the outside-air and relief-air dampers shall open fully and the return-air damper shall close. If neither make-up air unit is operating, the dampers shall be positioned to minimum position.

Unoccupied and Ventilation-delay modes: The outside-air, return-air and relief-air dampers shall return to their normal positions as shown.

Supply fan control:
Occupied and ventilation-delay modes: Supply fan shall start and shall run continuously.
Unoccupied mode: The supply fan shall cycle from a night-thermostat. The fans shall start at and stop at the setpoints as shown.

Heating and cooling coil control:
A space-temperature sensing element and transmitter operating through a space-temperature controller shall maintain the setpoint by sequencing the valves as shown. On a rise in space temperature, the space-temperature controller shall first gradually close the heating-coil valve. After the controller output passes through a deadband, the controller shall then gradually open the cooling-coil valve; except that, during Unoccupied mode, the cooling coil valve shall remain closed.

Filter:
A differential-pressure switch across the filter shall turn on the filter pilot light when the pressure drop across the filter reaches the setpoint.

Freeze Protection:
All Modes - A freezestat, located as shown, shall stop the supply fan, cause the outside air, return air, and relief air dampers to return to their normal position as shown, and shall turn on the low-temperature pilot light in the HVAC control panel if the temperature drops below the freezestat's setpoint as shown. Return to the normal mode of operation shall require manual reset at the freezestat and at the HVAC control panel.

Emergency Fan Shutdown:
Activation of a duct smoke detector in the supply-air ductwork, or activation of a manual emergency fan shutdown switch shall cause the associated fan to shutdown in accordance with NFPA 90A. Activation of these devices shall operate a pilot light on the HVAC control panel. The panel shall require manual resetting after the detector and the manual switch are reset.

LOOP CONTROL FUNCTION	DEVICE NUMBER	DEVICE FUNCTION	SETPOINT	RANGE	ADDITIONAL PARAMETERS
SPACE TEMPERATURE	DA-02-01 DA-02-02 DA-02-03	DAMPER ACTUATOR	——	4 - 20 mA	——
	MPS-02-01	DAMPER MINIMUM POSITION	SET OUTPUT TO PROVIDE 300 L/s OUTSIDE AIR	——	——
	MPS-02-02	DAMPER MAXIMUM POSITION	SET OUTPUT TO POSITION DAMPERS FULL STROKE	——	——
	DPS-02-01	FILTER ALARM	PER FILTER MANUFACTURER'S RECOMMENDATION	PER FILTER MANUFACTURER'S RECOMMENDATION	——
	VLV-02-01	HEATING COIL VALVE	——	4 - 8 mA	Kv = 21 CLOSE AGAINST 20 kPa
	VLV-02-02	COOLING COIL VALVE	——	16 - 20 mA	Kv = 19 CLOSE AGAINST 150 kPa
	TC-02-01	SPACE TEMPERATURE CONTROLLER	24°C	10 TO 30 °C	——
	TT-02-01	SPACE TEMPERATURE TRANSMITTER	——	10 TO 30 °C	——
MIXED AIR TEMPERATURE	TSL-02-01	LOW TEMPERATURE PROTECTION THERMOSTAT	4°C	2.8°C DIFFERENTIAL	——
SPACE LOW TEMPERATURE	TSL-02-02	NIGHT STAT - SPACE LOW TEMPERATURE PROTECTION	13°C	2.8°C DIFFERENTIAL	——
OCCUPIED MODE	CLK-02-01 CONTACT	365 DAY SCHEDULE	——	WEEKDAY SCHEDULE CLOSED: 0600 HRS OPEN: 2000 HRS	SAT, SUN, HOLIDAY SCHEDULE
VENTILATION DELAY MODE	CLK-02-01 CONTACT	365 DAY SCHEDULE	——	WEEKDAY SCHEDULE CLOSED: 0600 HRS OPEN: 0700 HRS	

NOTE: OTHER CONTROL DEVICES SUCH AS I/Ps, RELAYS, AND SIGNAL SELECTERS ARE NOT SHOWN.

US ARMY CORPS OF ENGINEERS SAVANNAH DISTRICT

DATE: 14JUL97 | REV.
CATEGORY CODE 721-11-11
SOLICITATION NO: DACA21-97-B-0055
PLOT DATE: $$DATE$$$$$
PLOT SCALE:
CONTRACT NO: DACA21-98-C-0022

U.S. ARMY ENGINEER DISTRICT
CORPS OF ENGINEERS
SAVANNAH, GEORGIA

SYMBOL	DESCRIPTION	DATE	BY
AS BUILT		30SEP04	DGC

RANGER BARRACKS COMPLEX
FORT BENNING, GEORGIA
DINING FACILITY
HVAC CONTROLS AHU-2

PLATE REFERENCE NUMBER:
MC-5
SHEET 340

RECORD DRAWING

DESIGN FILE: DGNSPEC$$$$$

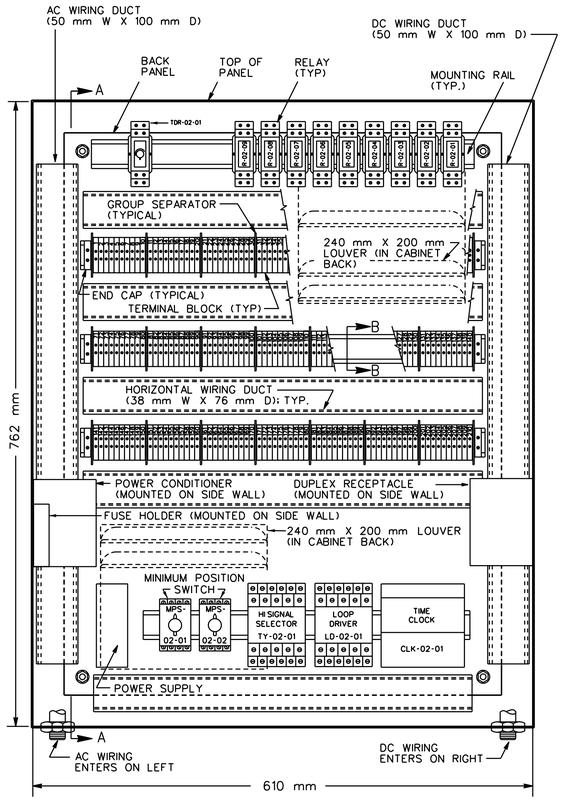

BACK PANEL LAYOUT FOR SYSTEM CONTROL PANEL

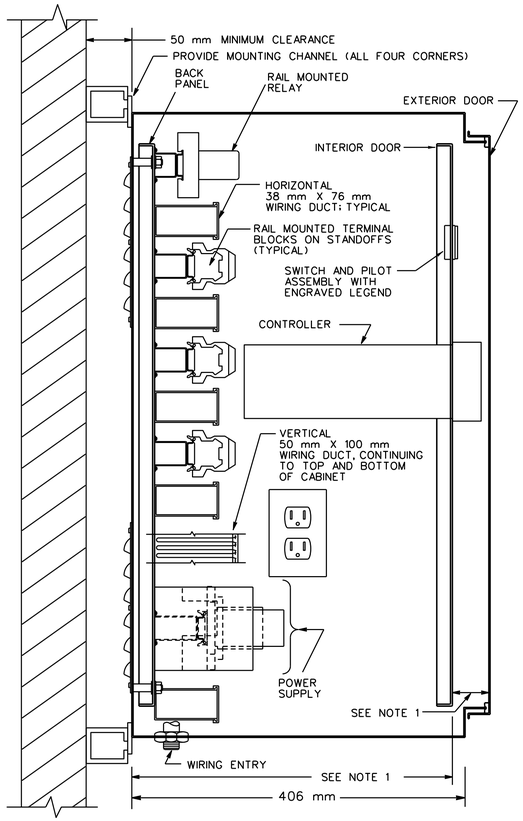

SECTION A-A

NOTES:

1. CONTROL PANEL SHALL BE CAPABLE OF ACCEPTING A CONTROLLER WHICH PROTRUDES 260 mm FROM THE REAR OF THE INNER DOOR AND 41 mm FROM THE FRONT OF THE INNER DOOR.
2. SEE SHEET E-3 FOR AC POWER SOURCE.

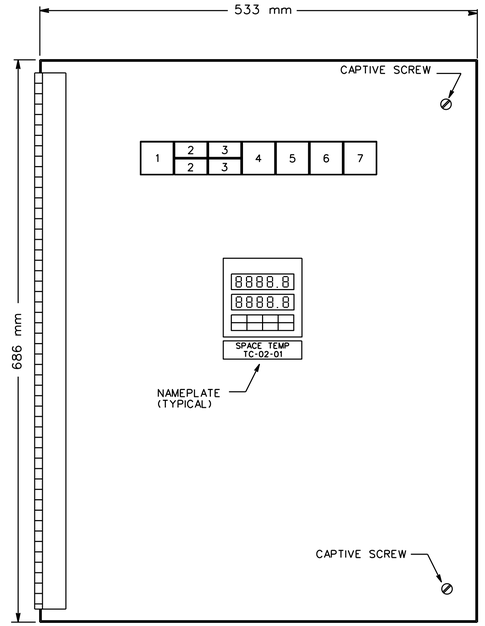

INTERIOR DOOR LAYOUT FOR SYSTEM CONTROL PANEL

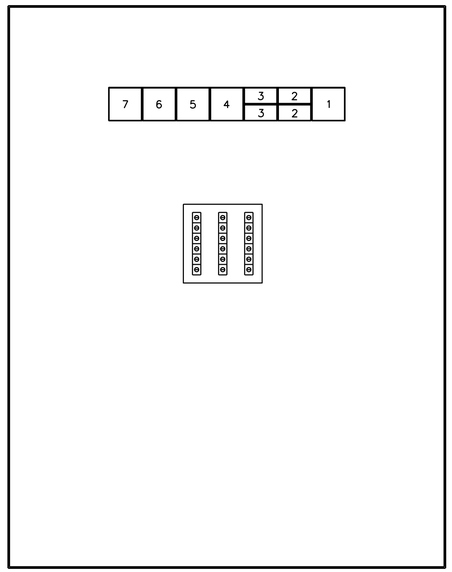

INTERIOR DOOR LAYOUT FOR SYSTEM CONTROL PANEL
(REAR VIEW)

SWITCH AND PILOT LIGHT LEGEND

POSITION LEGEND	DEVICE TYPE	IDENTIFIER
1 - RESET	NON-ILLUMINATED MOMENTARY CONTACT PUSH BUTTON SWITCH	HS-02-02
2 - AUTO/AUTO OVERRIDE	ILLUMINATED MAINTAINED CONTACT INTERLOCKED SWITCHES	HS-02-01
3 - SF ENABLE/OFF	ILLUMINATED MAINTAINED CONTACT INTERLOCKED SWITCHES	HS-02-03
4 - FILTER	PILOT LIGHT	PL-02-02
5 - VENT DELAY	PILOT LIGHT	PL-02-01
6 - LOW TEMP	PILOT LIGHT	PL-02-03
7 - SMOKE	PILOT LIGHT	PL-02-04

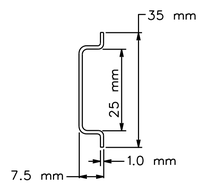

SECTION B-B
(TYPICAL FOR ALL MOUNTING RAILS)

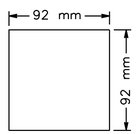

STANDARD CONTROLLER CUTOUT

1-10	11-20	21-30	31-40	41-50	51-60	61-70
RESERVE FOR CONTROLLER	TC-02-01 SPACE TEMP CONTROLLER AND EMCS SPACE TEMP PV RETRANS TERMINAL BLOCKS	RESERVE FOR CONTROLLER	RESERVE FOR CONTROLLER	RESERVE FOR CONTROLLER	RESERVE FOR CONTROLLER	SPACE

FIRST ROW OF TERMINAL BLOCKS

71-74	75-78	79-82	83-84	85-86	87-90	91-94	95-96	97-98	99-110	111-114	115-118	119-122	123-126	127-130	131-140
CLK-02-01 EMCS REPLACE-MENT	REMOTE SAFETY CONTACTS	TSL-02-01 AND EMCS CONTACTS	TSL-02-02	SPACE	SMK-02-01 AND EMCS CONTACTS	DPS-02-01 AND EMCS CONTACTS	MAU-3 AUX CONTACTS	MAU-4 AUX CONTACTS	SPACE	SPACE	SPACE	SPACE	SPACE	SPACE	SPACE

SECOND ROW OF TERMINAL BLOCKS

141-160	171-180	181-190	191-210
120 V AC POWER DISTRIBUTION TERMINAL BLOCKS	24 V DC POWER DISTRIBUTION TERMINAL BLOCKS	SUPPLY FAN STARTER CONTROL WIRING TERMINAL BLOCKS	SPACE

THIRD ROW OF TERMINAL BLOCKS

CONTROL PANEL TERMINAL BLOCK LAYOUT

US ARMY CORPS OF ENGINEERS
SAVANNAH DISTRICT

DATE: 14JUL97
REV.
CATEGORY CODE 721-11-11
SOLICITATION NO: DACA21-97-B-0055
PLOT DATE: $$DATE$$$$$
PLOT SCALE: :
CONTRACT NO: DACA21-98-C-0022

U.S. ARMY ENGINEER DISTRICT
CORPS OF ENGINEERS
SAVANNAH, GEORGIA

SYMBOL	DESCRIPTION	DATE	BY
AS BUILT		30SEP04	DGC

RANGER BARRACKS COMPLEX
FORT BENNING, GEORGIA

DINING FACILITY
HVAC CONTROLS (AHU-2)
CONTROL PANEL DETAILS

PLATE REFERENCE NUMBER:
MC-6
SHEET 341

RECORD DRAWING

DESIGN FILE: DGNSPEC$$$$$

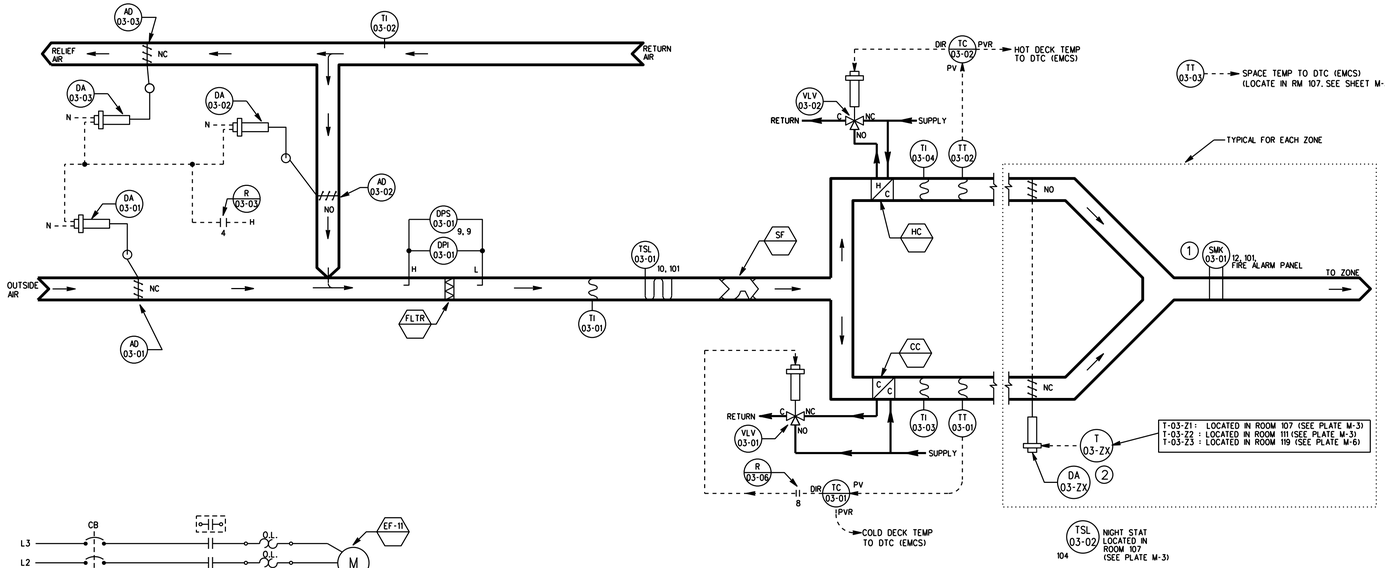

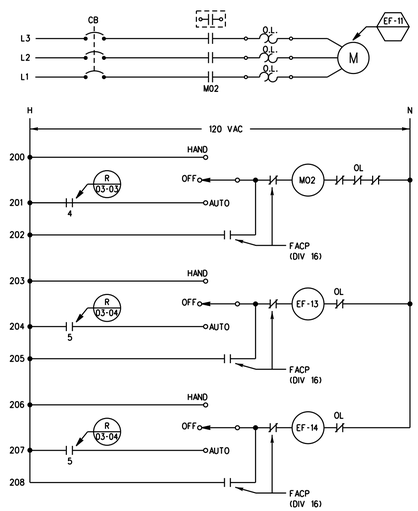

EXHAUST FAN STARTERS

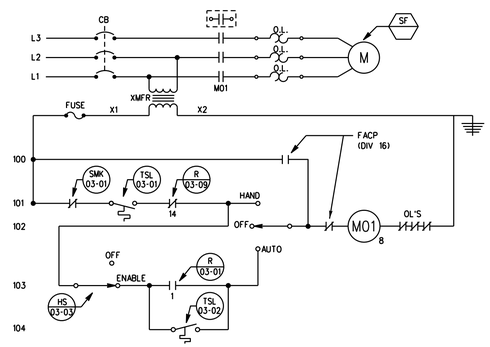

SUPPLY FAN STARTER

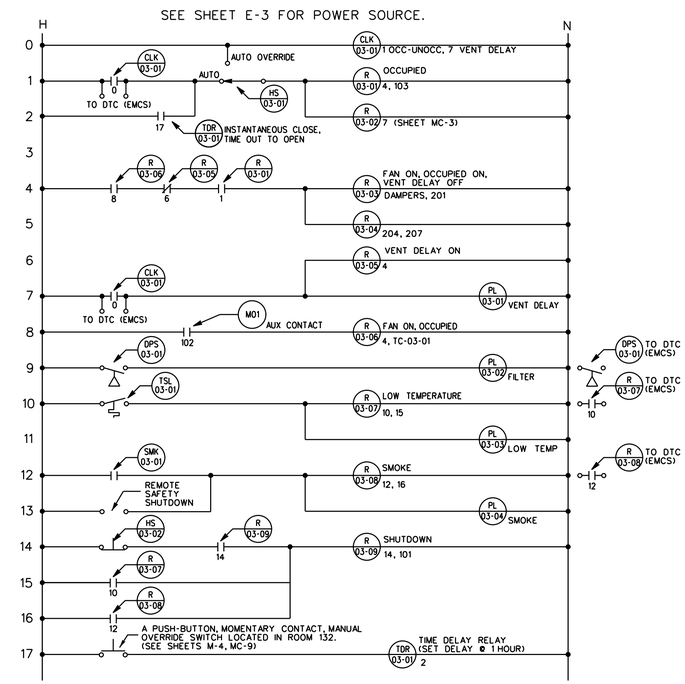

AIR HANDLING UNIT CONTROL PANEL

LOOP CONTROL FUNCTION	DEVICE NUMBER	DEVICE FUNCTION	SETPOINT	RANGE	ADDITIONAL PARAMETERS
MIXED AIR TEMPERATURE	DA-03-01 DA-03-02 DA-03-03	DAMPER ACTUATORS	——	TWO-POSITION	——
	DPS-03-01	FILTER ALARM	PER MANUFACTURER'S RECOMMENDATION	PER MANUFACTURER'S RECOMMENDATION	——
	TSL-03-01	FREEZESTAT	4° C	2 TO 18° C	2.8° C DIFFERENTIAL
SPACE LOW TEMPERATURE	TSL-03-02	SPACE LOW TEMPERATURE PROTECTION ALARM	13° C	——	2.8° C DIFFERENTIAL
COLD DECK AIR TEMPERATURE	VLV-03-01	COOLING COIL VALVE	——	4 - 20 mA	Kv=35 ③ CLOSE AGAINST 130 kPa
	TC-03-01	COLD DECK TEMPERATURE CONTROLLER	14° C	5 TO 60° C	——
	TT-03-01	COLD DECK TEMPERATURE TRANSMITTER	——	5 TO 60° C	——
HOT DECK AIR TEMPERATURE	VLV-03-02	HEATING COIL VALVE	——	4 - 20 mA	Kv=29 ③ CLOSE AGAINST 25 kPa
	TC-03-02	HOT DECK TEMPERATURE CONTROLLER		5 TO 60° C	——
	TT-03-02	HOT DECK TEMPERATURE TRANSMITTER	——	5 TO 60° C	——
OCCUPIED MODE	CLK-03-01 CONTACT	365 DAY SCHEDULE	——	CLOSE: 0700 HRS OPEN: 1700 HRS M THRU F	OPEN : SAT, SUN AND HOLIDAYS
VENTILATION DELAY MODE	CLK-03-01 CONTACT	365 DAY SCHEDULE	——	CLOSE: 0700 HRS OPEN: 0800 HRS M THRU F	OPEN : SAT, SUN AND HOLIDAYS
SPACE TEMPERATURE	DA-03-ZX	ZONE DAMPER ACTUATOR	——	——	——
	T-03-ZX	ZONE THERMOSTAT		13 TO 29° C	ELECTRONIC, PROPORTIONAL DIRECT ACTING THROTTLING RANGE = 4° C
	TT-03-03	SPACE TEMPERATURE TRANSMITTER (EMCS)	——	10 TO 30° C	——

NOTE: OTHER CONTROL DEVICES SUCH AS I/PS AND RELAYS ARE NOT SHOWN.

CONTROL SYSTEM EQUIPMENT

Multi-Zone Unit MZ-1 Sequence of Operation

Occupied, Unoccupied and Ventilation-Delay Modes:
Ventilation-delay mode timing shall start prior to the occupied-mode timing. The time clock shall close a contact, which shall turn on the ventilation-delay pilot light and energize a relay which shall prevent the outside air damper from opening. At the time shown, the clock shall close another contact which shall turn on the occupied mode pilot light and shall place the control system in the occupied mode of operation. At the expiration of the ventilation-delay mode timing period, the time clock shall open the contact to turn off the ventilation-delay mode pilot light and de-energize a relay to allow the outside air damper to open. At the time shown, the time clock shall open the contact to turn off the occupied mode pilot light and shall place the control system in the unoccupied mode of operation. Activation of a time-delay relay, thru a space mounted manual switch, shall place the system in the occupied mode for a period of one hour.

Outside-air, Return-air, and Relief-air Damper Control:
Occupied mode: The outside-air and relief-air dampers shall open fully and the return-air damper shall close.

Unoccupied and Ventilation-delay modes: The outside-air, return-air and relief-air dampers shall return to their normal positions as shown.

Supply fan control:
Occupied and ventilation-delay modes: Supply fan shall start and shall run continuously.
Unoccupied mode: The supply fan shall cycle from a night-thermostat. The fans shall start at and stop at the setpoints as shown.

Hot-Deck Heating Coil:
Occupied, Unoccupied and Ventilation-delay modes: The heating coil temperature controller shall accept a signal at its process variable input from a temperature sensing element and transmitter located in the discharge air of the coil, and the controller output shall modulate the heating coil control valve to maintain the setpoint as shown.

Cold-Deck Cooling Coil:
Occupied and Ventilation-delay modes: The cooling coil temperature controller shall accept a signal at its process variable input from a temperature sensing element and transmitter located in the discharge air of the coil, and the controller output shall modulate the cooling coil control valve to maintain the setpoint as shown.

Unoccupied Mode - The cooling-coil temperature-controller output signal shall be interrupted and the cooling-coil control valve shall be closed.

Filter:
A differential-pressure switch across the filter shall turn on the filter pilot light when the pressure drop across the filter reaches the setpoint.

Freeze Protection:
All Modes - A freezestat, located as shown, shall stop the supply fan, cause the outside air, return air, and relief air dampers to return to their normal position as shown, and shall turn on the low-temperature pilot light in the HVAC control panel if the temperature drops below the freezestat's setpoint as shown. Return to the normal mode of operation shall require manual reset at the freezestat and at the HVAC control panel.

Zone-Damper Control:
All Modes - A space thermostat for each zone shall gradually operate the zone-mixing damper to heat and cool its respective zone by mixing cold-deck air and hot-deck air to maintain the setpoint as shown. On a rise in space temperature, the hot-deck damper shall gradually close, and the cold-deck damper shall gradually open.

Emergency Fan Shutdown:
Activation of a duct smoke detector in the supply-air ductwork, or activation of a manual emergency fan shutdown switch shall cause the associated fan to shutdown in accordance with NFPA 90A. Activation of these devices shall operate a pilot light on the HVAC control panel. The panel shall require manual resetting after the detector and the manual switch are reset.

Exhaust fans EF-11, EF-13 & EF-14:
Exhaust fans EF-11, EF-13 and EF-14 shall be interlocked with ahu MZ-1 such that they are energized whenever MZ-1 is operating in occupied mode and ventilation-delay mode is off.

KEYED NOTES FOR MZ-1 CONTROL:

1. ONLY ONE SMOKE DETECTOR IS REQUIRED. INSTALL IN THE DUCT TO ZONE 1.
2. THE NOTATION OF ZX INDICATES A ZONE DEVICE, WHERE X IS THE ZONE NUMBER AS DEFINED BY THE UNIT SCHEDULE ON SHEET M-1.
3. THE VALUE SHOWN FOR Kv USES UNITS OF m3/hr @ 100 kPa delta P.

US ARMY CORPS OF ENGINEERS SAVANNAH DISTRICT

DATE: 14JUL97 | REV.
CATEGORY CODE 721-11-11
SOLICITATION NO: DACA21-97-B-0055
PLOT DATE: $$DATE$$$$$ | PLOT SCALE: :
CONTRACT NO DACA21-98-C-0022

U.S. ARMY ENGINEER DISTRICT CORPS OF ENGINEERS SAVANNAH, GEORGIA

SYMBOL	DESCRIPTION	DATE	BY
AS BUILT		30SEP04	DGC

RANGER BARRACKS COMPLEX
FORT BENNING, GEORGIA
DINING FACILITY
HVAC CONTROLS (MZ-1)

PLATE REFERENCE NUMBER: MC-7
SHEET 342

RECORD DRAWING

DESIGN FILE: DCNSPEC$$$$$

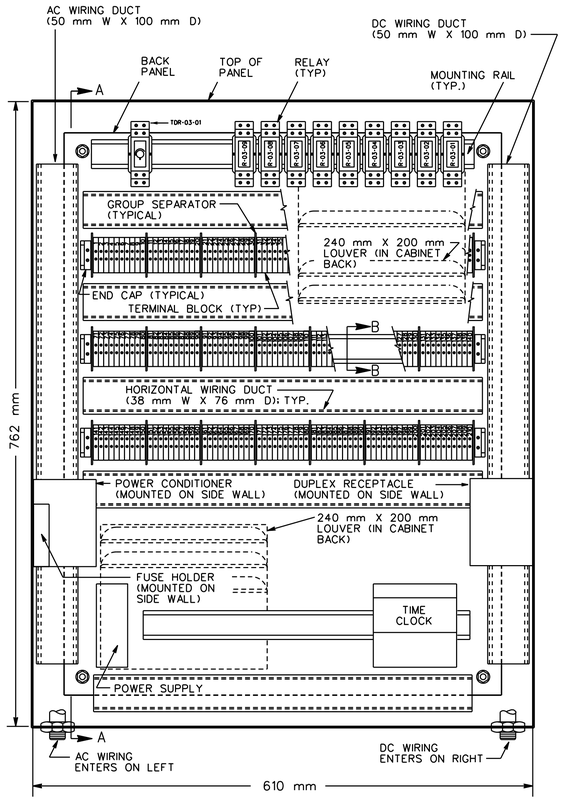

BACK PANEL LAYOUT FOR SYSTEM CONTROL PANEL

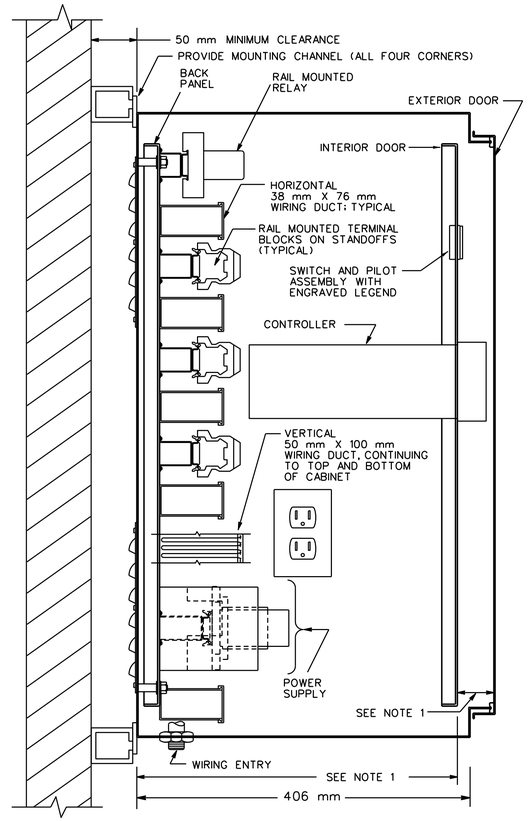

SECTION A-A

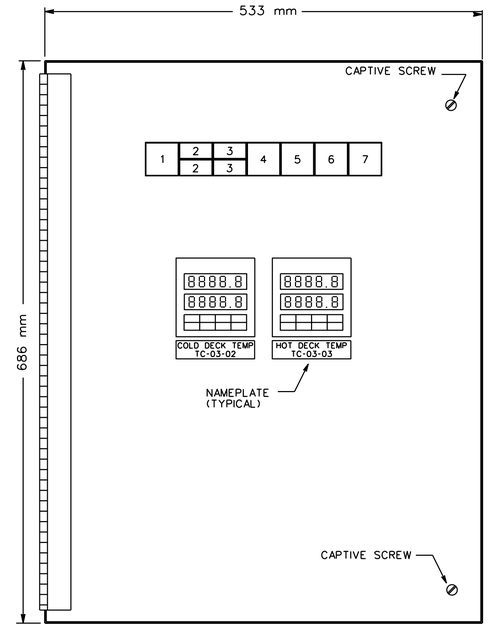

INTERIOR DOOR LAYOUT FOR SYSTEM CONTROL PANEL

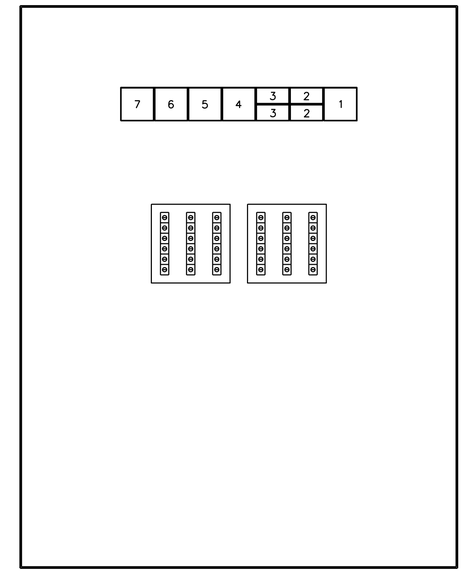

INTERIOR DOOR LAYOUT FOR SYSTEM CONTROL PANEL
(REAR VIEW)

NOTES:

1. CONTROL PANEL SHALL BE CAPABLE OF ACCEPTING A CONTROLLER WHICH PROTRUDES 260 mm FROM THE REAR OF THE INNER DOOR AND 41 mm FROM THE FRONT OF THE INNER DOOR.
2. SEE SHEET E-3 FOR AC POWER SOURCE.

SWITCH AND PILOT LIGHT LEGEND

POSITION LEGEND	DEVICE TYPE	IDENTIFIER
1 - RESET	NON-ILLUMINATED MOMENTARY CONTACT PUSH BUTTON SWITCH	HS-03-02
2 - AUTO/AUTO OVERRIDE	ILLUMINATED MAINTAINED CONTACT INTERLOCKED SWITCHES	HS-03-01
3 - ENABLE/OFF	ILLUMINATED MAINTAINED CONTACT INTERLOCKED SWITCHES	HS-03-03
4 - FILTER	PILOT LIGHT	PL-03-02
5 - VENT DELAY	PILOT LIGHT	PL-03-01
6 - LOW TEMP	PILOT LIGHT	PL-03-03
7 - SMOKE	PILOT LIGHT	PL-03-04

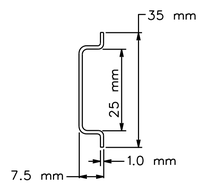

SECTION B-B
(TYPICAL FOR ALL MOUNTING RAILS)

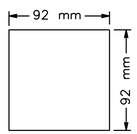

STANDARD CONTROLLER CUTOUT

1-10	11-20	21-30	31-40	41-50	51-60	61-70
RESERVE FOR CONTROLLER	RESERVE FOR CONTROLLER	TC-03-01 COLD DECK TEMP CONTROLLER AND EMCS COLD DECK TEMP PV RETRANS TERMINAL BLOCKS	TC-03-02 HOT DECK TEMP CONTROLLER AND EMCS HOT DECK TEMP PV RETRANS TERMINAL BLOCKS	RESERVE FOR CONTROLLER	RESERVE FOR CONTROLLER	SPACE

FIRST ROW OF TERMINAL BLOCKS

71-74	75-78	79-82	83-84	85-86	87-90	91-94	95-98	99-102	103-110	111-114	115-118	119-122	123-126	127-130	131-140
CLK-03-01 EMCS REPLACE-MENT	REMOTE SAFETY CONTACTS	TSL-03-01 AND EMCS CONTACTS	TSL -03 -02	SPACE	SMK-03-01 AND EMCS CONTACTS	DPS-03-01 AND EMCS CONTACTS	SPACE	SPACE	SPACE	SPACE	SPACE	SPACE	SPACE	SPACE	SPACE

SECOND ROW OF TERMINAL BLOCKS

141-160	171-180	181-190	191-210
120 V AC POWER DISTRIBUTION TERMINAL BLOCKS	24 V DC POWER DISTRIBUTION TERMINAL BLOCKS	SUPPLY FAN STARTER CONTROL WIRING TERMINAL BLOCKS	EXHAUST FAN STARTERS CONTROL WIRING TERMINAL BLOCKS

THIRD ROW OF TERMINAL BLOCKS

CONTROL PANEL TERMINAL BLOCK LAYOUT

US ARMY CORPS OF ENGINEERS
SAVANNAH DISTRICT

DATE: 14JUL97
REV.
CATEGORY CODE 721-11-11
SOLICITATION NO: DACA21-97-B-0055
PLOT DATE: $$DATE$$$$$
PLOT SCALE: :
CONTRACT NO: DACA21-98-C-0022

U.S. ARMY ENGINEER DISTRICT
CORPS OF ENGINEERS
SAVANNAH, GEORGIA

SYMBOL	DESCRIPTION	DATE	BY
AS BUILT		30SEP04	DGC

RANGER BARRACKS COMPLEX
FORT BENNING, GEORGIA

DINING FACILITY
HVAC CONTROLS MZ-1
CONTROL PANEL DETAILS

PLATE REFERENCE NUMBER:
MC-8
SHEET 343

RECORD DRAWING

DESIGN FILE: DCNSPEC$$$$$

Make-up Air Unit Sequence of Operation:

Each make-up air unit is interlocked with one or more exhaust fans. The interlock relationship is as follows:

Make-up Air Unit	Exhaust Fan(s) interlocked
MAU-1	EF-01
MAU-2	EF-02
MAU-3	EF-04, EF-06, EF-08
MAU-4	EF-05, EF-07, EF-09
MAU-5	EF-10

Supply Fan Start:
The exhaust fans are operated by the exhaust hood control panels located in the kitchen, servery, and carry-out areas. A MAU is started when any of its interlocked exhaust fans are energized. Likewise, the MAU does not stop until each of its interlocked exhaust fans is de-energized. When the supply fan is started, the outside air damper shall also open.

Heating function:
The gas-fired heating section shall modulate its output based on the discharge air temperature. This modulation shall be in accordance with the burner manufacturer's recommendation.

Exhaust Fan Sequence of Operation:
Exhaust fans EF-01, EF-02, EF-04, EF-05, EF-06, EF-07, EF-08, EF-09, and EF-10 shall each be connected to an exhaust hood control panel and the fire alarm control panel (FACP). The fans shall be turned on and off from the exhaust hood control panel for normal operation. If the FACP goes into an alarmed condition, each exhaust fan shall come under control of the FACP.

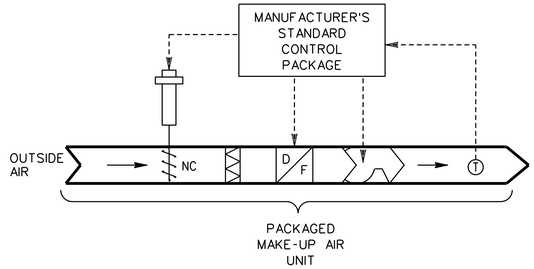

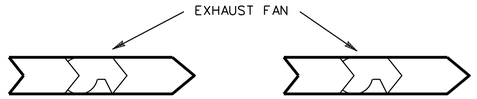

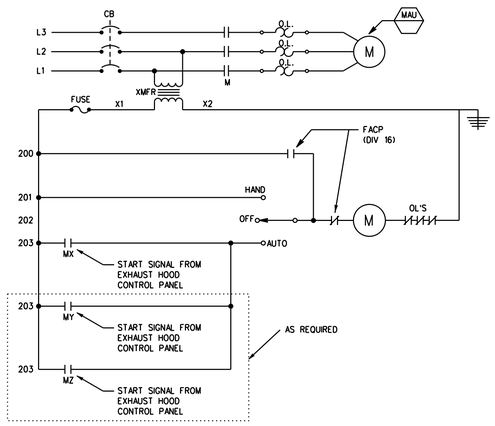

MAKE-UP AIR UNIT STARTER (TYP.)

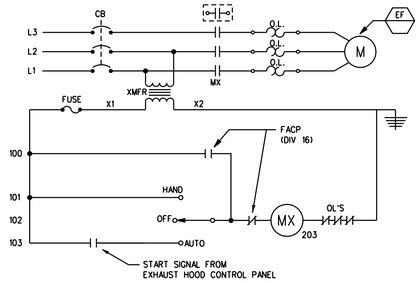

EXHAUST FAN STARTER (TYP.)

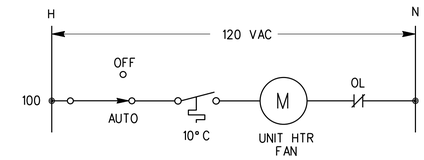

Unit-Heater (UH-1 & UH-2) Sequence of Operation:

A wall-mounted thermostat with an "AUTO-OFF" switch located as shown, shall cycle the fan to maintain its setpoint as shown when the switch is in the "AUTO" position. When the switch is in the "OFF" position, the fan shall be stopped.

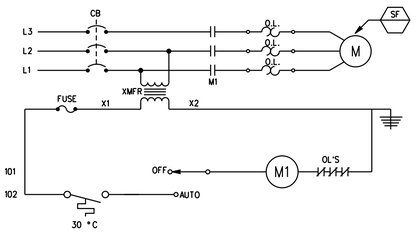

SUPPLY FAN (SF-1 & SF-2) Sequence of Operation:

A wall-mounted thermostat with an "AUTO-OFF" switch located as shown, shall cycle the fan to maintain its setpoint as shown when the switch is in the "AUTO" position. When the switch is in the "OFF" position, the fan shall be stopped.

(1) ADJUSTABLE TO 3 HOURS PER SPEC.

HVAC SYSTEM OVERRIDE
1 HR DURATION

AHU-1 AHU-2 MZ-1

MOMENTARY CONTACT OVERRRIDE SWITCHES; LOCATE ON WALL IN RM 132. (SEE SHEET M-4)

EMCS DATA TERMINAL STRIP

NO.	ITEM	TYPE
1	AHU-1 EMCS START OCCUPIED CONTACT (LADDER DIAGRAM LINE 1)	DO
2	AHU-1 EMCS START VENT DELAY CONTACT (LADDER DIAGRAM LINE 8)	DO
3	SPARE	
4	AHU-1 MIXED AIR FILTER ALARM (LADDER DIAGRAM LINE 10, DPS-01-01)	DI
5	AHU-1 LOW TEMPERATURE ALARM (LADDER DIAGRAM LINE 11, R-01-08)	DI
6	AHU-1 SMOKE ALARM (LADDER DIAGRAM LINE 13, R-01-09)	DI
7	SPARE	
8	AHU-1 SPACE TEMPERATURE (PV RETRANSMISSION, TC-01-01)	AI
9	SPARE	
10	SPARE	
11	AHU-2 EMCS START OCCUPIED CONTACT (LADDER DIAGRAM LINE 1)	DO
12	AHU-2 EMCS START VENT DELAY CONTACT (LADDER DIAGRAM LINE 8)	DO
13	SPARE	
14	AHU-2 MIXED AIR FILTER ALARM (LADDER DIAGRAM LINE 10, DPS-02-01)	DI
15	AHU-2 LOW TEMPERATURE ALARM (LADDER DIAGRAM LINE 11, R-02-07)	DI
16	AHU-2 SMOKE ALARM (LADDER DIAGRAM LINE 13, R-02-08)	DI
17	SPARE	
18	AHU-2 SPACE TEMPERATURE (PV RETRANSMISSION, TC-02-01)	AI
19	SPARE	
20	SPARE	

EMCS DATA TERMINAL STRIP

NO.	ITEM	TYPE
21	MZ-1 EMCS START OCCUPIED CONTACT (LADDER DIAGRAM LINE 1)	DO
22	MZ-1 EMCS START VENT DELAY CONTACT (LADDER DIAGRAM LINE 7)	DO
23	SPARE	
24	MZ-1 MIXED AIR FILTER ALARM (LADDER DIAGRAM LINE 9, DPS-03-01)	DI
25	MZ-1 LOW TEMPERATURE ALARM (LADDER DIAGRAM LINE 10, R-03-07)	DI
26	MZ-1 SMOKE ALARM (LADDER DIAGRAM LINE 12, R-03-08)	DI
27	SPARE	
28	SPARE	
29	MZ-1 COLD DECK TEMPERATURE (PV RETRANSMISSION, TC-03-01)	AI
30	MZ-1 HOT DECK TEMPERATURE (PV RETRANSMISSION, TC-03-02)	AI
31	DINING RM. SPACE TEMP (TT-03-03)	AI
32	SPARE	
33	HYDRONICS - START HEATING MODE CONTACT (LADDER DIAGRAM LINE 1)	DO
34	HYDRONICS - START COOLING MODE CONTACT (LADDER DIAGRAM LINE 5)	DO
35	SPARE	
36	HYDRONICS - HW SUPPLY TEMERATURE (TT-04-02)	AI
37	HYDRONICS - HW RETURN TEMERATURE (TT-04-03)	AI
38	HYDRONICS - CHW SUPPLY TEMERATURE (TT-04-04)	AI
39	HYDRONICS -CHW RETURN TEMERATURE (TT-04-05)	AI
40	SPARE	

NOTES:

1. EMCS CONNECTIONS UNDER THIS CONTRACT TO CONSIST OF WIRING EMCS "POINTS" FROM CONTROL PANELS TO THE DATA TERMINAL CABINET (DTC) AND PROVIDING A 27 mm CONDUIT WITH PULL FROM THE "FUTURE FID" LOCATION (SEE M-7) TO THE TELEPHONE BACKBOARD IN THE COMMUNICATIONS ROOM.

US ARMY CORPS OF ENGINEERS SAVANNAH DISTRICT

SYMBOL	DESCRIPTION	DATE	BY
(1)	REVISED AS BUILT	30SEP04	DGC

DATE: 14JUL97
CATEGORY CODE 721-11-11
SOLICITATION NO: DACA21-97-B-0055
PLOT DATE: $$DATE$$$$$
PLOT SCALE: :
REV.
CONTRACT NO: DACA21-98-C-0022

U.S. ARMY ENGINEER DISTRICT
CORPS OF ENGINEERS
SAVANNAH, GEORGIA

RANGER BARRACKS COMPLEX
FORT BENNING, GEORGIA
DINING FACILITY
MISC. HVAC CONTROLS

PLATE REFERENCE NUMBER:
MC-9
SHEET 344

RECORD DRAWING

DESIGN FILE: DGNSPEC$$$$$

MECHANICAL PLUMBING SYMBOLS AND ABBREVIATIONS

SYMBOL	DESCRIPTION	SYMBOL	DESCRIPTION	SYMBOL	DESCRIPTION
— — —	COLD WATER SUPPLY		GATE VALVE	AFF	ABOVE FINISHED FLOOR
— 45 —	HOT WATER (45° C)		CHECK VALVE	AD	AREA DRAIN
— 60 —	HOT WATER (60° C)		GLOBE VALVE	C.I.	CAST IRON
— SS —	SANITARY SEWER		BALANCING VALVE	CO	CLEAN OUT
- - - - - - - - -	SANITARY SEWER VENT		FLEXIBLE CONNECTION	CONN	CONNECT
— GW —	GREASE LAIDEN SANITARY SEWER		3-WAY CONTROL VALVE	DTL	DETAIL
— WPS —	WASTE PULPING SUPPLY		2-WAY CONTROL VALVE	DF	DRINKING FOUNTAIN
— WPR —	WASTE PULPING RETURN		UNION CONNECTION	EFF	EFFICIENCY
— G —	GAS PIPING		FLANGE CONNECTION	EWT	ENTERING WATER TEMP
	PITCH DN IN DIR OF ARROW		THERMOMETER	FCO	FLOOR CLEAN OUT
	ELBOW TURNING UP		PRESSURE GAUGE	FD	FLOOR DRAIN
	ELBOW TURNING DOWN		DIRECTION OF FLOW	HB	HOSE BIBB
			Y STRAINER WITH BLOW-OFF VALVE	INV	INVERT
			PRESSURE RELIEF VALVE	LWT	LEAVING WATER TEMP
			PRESSURE REGULATING/REDUCING VALVE	LAV	LAVATORY
			MANUAL AIR VENT	P	PLUMBING FIXTURE
			VACUUM RELIEF VALVE	PD	PRESSURE DROP
		WH	WALL HYDRANT (FROST PROOF)	VTR	VENT THRU ROOF
		HB	HOSE BIBB	WH	WATER HEATER
		NC	NORMALLY CLOSED	WCO	WALL CLEAN OUT
				WC	WATER CLOSET
		NO	NORMALLY OPEN	WHA	WATER HAMMER ARRESTOR

DOMESTIC WATER HEATER SCHEDULE

ITEM	HEAT SOURCE	STORAGE L	TEMPERATURE RISE (°C)	MIN. RECOVERY RATE	REMARKS
WH-1	NAT. GAS	3250	55°C	6000 L/h	FORCED DRAFT

DOMESTIC HOT WATER PUMP SCHEDULE

SYMBOL	SERVICE	L/s	TOTAL HEAD	FLUID TEMP	MAXIMUM WATTS	SERVICE (MIN) EFFICIENCY	TYPE	LOCATION	REMARKS
HWCP-1	45°C WATER	0.5	57.5 kPa	54°C	200	20%	IN-LINE		
HWCP-2	60°C WATER	0.5	57.5 kPa	54°C	200	20%	IN-LINE		

SUMP PUMP SCHEDULE

ITEM	WATTS	L/s	kPa	TYPE	LOCATION	REMARKS
SP-1	200	0.8	60	PACKAGED SYSTEM		
SP-2	200	0.8	60	PACKAGED SYSTEM		
SP-3	200	0.8	60	PACKAGED SYSTEM		

PLUMBING FIXTURE SCHEDULE

SYMBOL	DESCRIPTION	COLD WATER	HOT WATER	VENT	WASTE	REMARKS
P-1B	WATER CLOSET	25	–	50	100	(1)
P-2A	WATER CLOSET	25	–	50	100	HANDICAPPED (1)
P-3	URINAL	20	–	32	50	(1)
P-5B	LAVATORY	15	15	32	32	HANDICAPPED (1) (2)
P-8A	SERVICE SINK	15	15	40	80	
P-15	ELECTRIC WATER COOLER	15	–	32	32	
WH	WALL HYDRANT	20	–	–	–	

KEYED NOTES:

(1) HARDWARE TO BE CHROME OR STAINLESS STEEL.

(2) BOWL TO BE SELF-RIMMING. SEE ARCH. FOR LOCATION IN COUNTER.

US ARMY CORPS OF ENGINEERS SAVANNAH DISTRICT

DESIGNED BY:

SUBMITTED BY:

CHIEF,

RECOMMENDED:

CHIEF, DESIGN BRANCH

DATE: 14-JUL-97

REV.

CATEGORY CODE 721-11-11

SOLICITATION NO: DACA21-97-B-0055

PLOT DATE: $$DATE$$$$$$

PLOT SCALE:

CONTRACT NO: DACA21-98-C-0022

U.S. ARMY ENGINEER DISTRICT CORPS OF ENGINEERS SAVANNAH, GEORGIA

SYMBOL	DESCRIPTION	BY	DATE
(1)	AS BUILT GENERAL REVISIONS	DGC	30SEP04
		GWW	30JUL97

RANGER BARRACKS COMPLEX FORT BENNING, GEORGIA

DINING FACILITY PLUMBING LEGEND & SCHEDULES

PLATE REFERENCE NUMBER: MP-1

SHEET 345

RECORD DRAWING

DESIGN FILE: DONSPEC$$$$$$

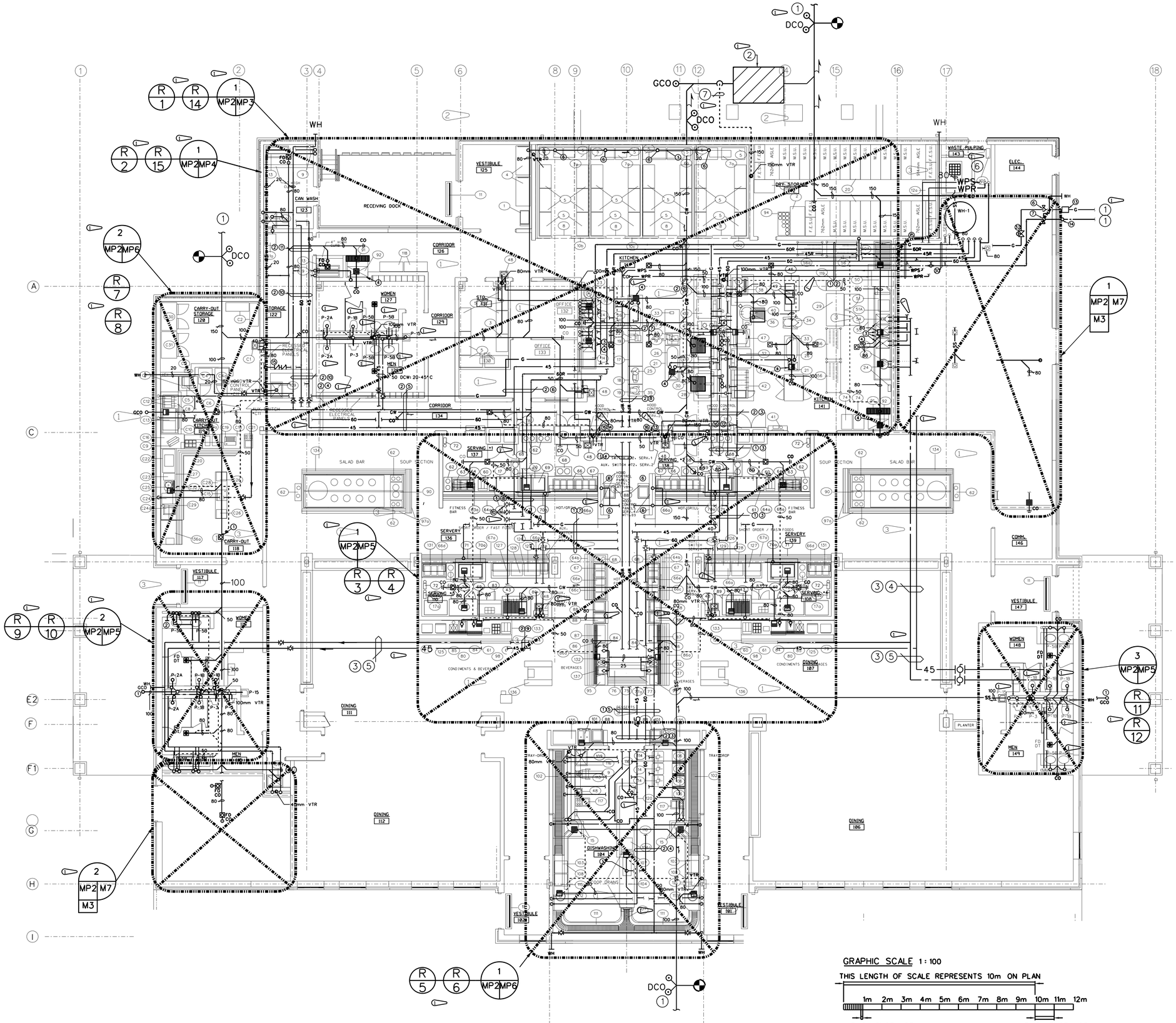

GENERAL NOTES:

1. SEE GENERAL NOTES ON SHEET M-2

KEYED NOTES:

1. SEE SHEET W-5 FOR CONTINUATION OF SEWER AND WATER LINES, AND SHEET MS-3 FOR CONTINUATION OF GAS LINE.
2. GREASE TRAP. SEE DETAIL 4, SHEET MP-11.
3. PIPING ABOVE CEILING TO BE HUNG ON TRAPEZE HANGERS.
4. 65mm DCW; 32mm-45° C.
5. 25mm-45° C; 50mm DCW.
6. SEE RISER R-11, SHEET MP-10 FOR WASTE PULPING SYSTEM SCHEMATIC.
7. 150mm VENT LINE. RUN LINE TO BUILDING IN GROUND.

US ARMY CORPS OF ENGINEERS SAVANNAH DISTRICT

DATE: 14JUL97 | REV.
CATEGORY CODE 721-11-11
SOLICITATION NO: DACA21-97-B-0055
PLOT DATE: $$DATE$$$$$$
PLOT SCALE: 1
CONTRACT NO: DACA21-98-C-0022

U.S. ARMY ENGINEER DISTRICT
CORPS OF ENGINEERS
SAVANNAH, GEORGIA

SYMBOL	DESCRIPTION	DATE	BY
1	AS BUILT GENERAL REVISIONS	30SEP04	DGC
		30JUL97	SWW

RANGER BARRACKS COMPLEX
FORT BENNING, GEORGIA

DINING FACILITY
PLUMBING PLAN

PLATE REFERENCE NUMBER:
MP-2
SHEET 346

DINING HALL: PLUMBING PLAN
SCALE: 1:100

GRAPHIC SCALE 1 : 100
THIS LENGTH OF SCALE REPRESENTS 10m ON PLAN
1m 2m 3m 4m 5m 6m 7m 8m 9m 10m 11m 12m
THIS LENGTH OF SCALE REPRESENTS 100mm ON PLAN
THIS LENGTH OF SCALE REPRESENTS 1m ON PLAN

ALL DIMENSIONS ARE MILLIMETERS (mm) UNLESS OTHERWISE NOTED.

RECORD DRAWING

DESIGN FILE: DONSPEC$$$$$$

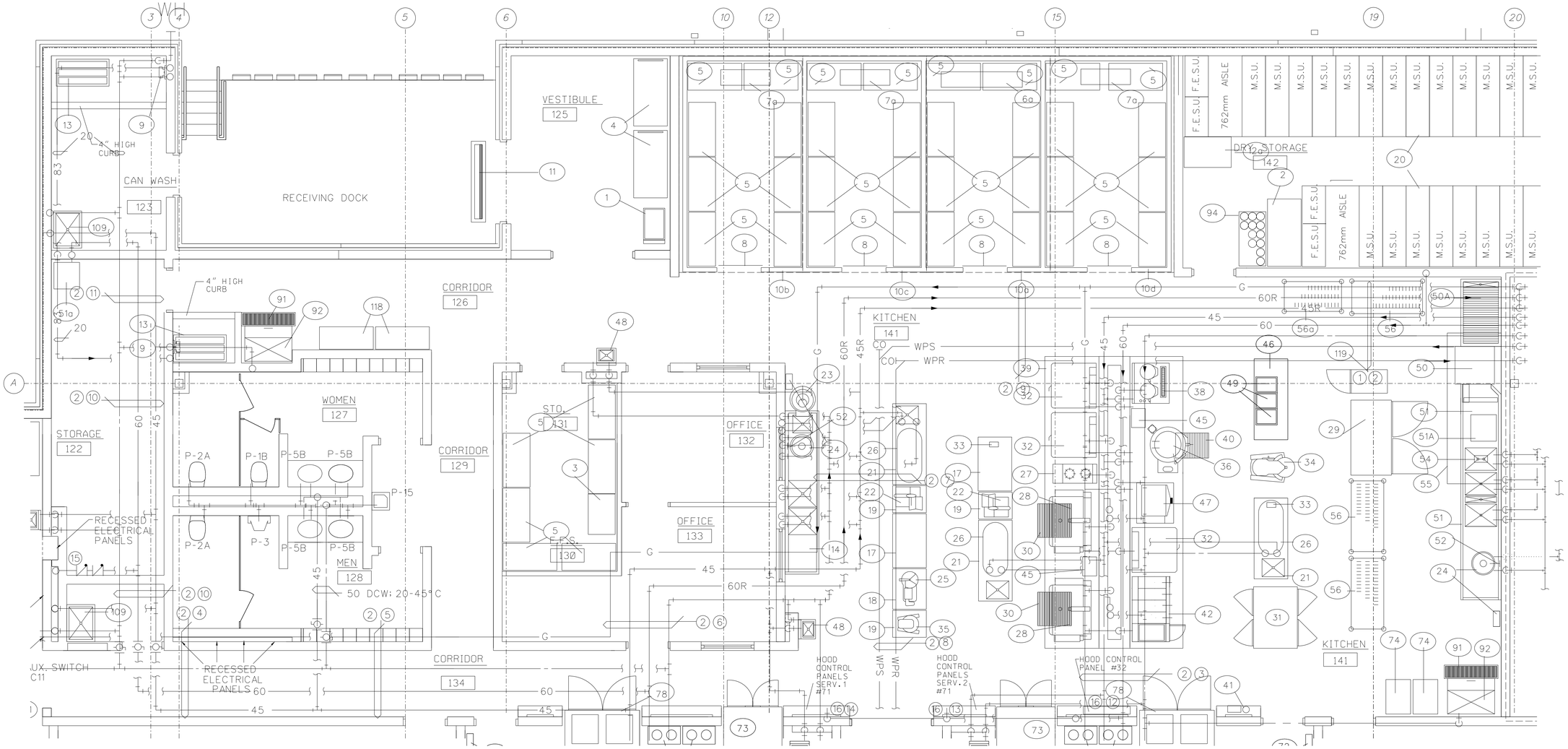

ENLARGED KITCHEN SUPPLY PLUMBING PLAN

1 MP2 MP3

SCALE: 1:50

GENERAL NOTES:

1. SEE GENERAL NOTES ON SHEET M-2

KEYED NOTES FOR KITCHEN SUPPLY PLUMBING:

1. 50mm GAS; 20mm-60R; 20mm-45R; 50mm-45°C; 40mm-60°C; 65mm DCW; 80mm WPS; 80mm WPR.
2. PIPING IN CRAWL SPACE TO BE HUNG ON TRAPEZE HANGERS.
3. 50mm GAS; 50mm-45°C; 40mm-60°C; 65mm DCW.
4. 40mm GAS; 32mm-45°C; 25mm-60°C; 32mm DCW.
5. 40mm GAS; 32mm-45°C; 25mm-60°C; 40mm DCW.
6. 40mm GAS; 25mm-45°C; 20mm-60R; 25mm DCW.
7. 40mm GAS; 25mm-45°C; 20mm-60R; 25mm DCW; 80mm WPR; 80mm WPS. (2)
8. 80mm WPS; 80mm WPR.
9. 40mm GAS; 20mm-45R; 20mm-60R; 80mm WPS; 80mm WPR. (2)
10. 32mm-45°C; 25mm-60°C; 32mm DCW.
11. 25mm-45°C; 25mm-60°C; 25mm DCW.
12. CONTROL PANEL FOR EXHAUST HOOD IN KITCHEN.
13. CONTROL PANEL FOR EXHAUST HOOD IN SERVERY #2.
14. CONTROL PANEL FOR EXHAUST HOOD IN SERVERY #1.
15. INSTALL A DOUBLE CHECK BACKFLOW ASSEMBLY.
16. WATER LINES FROM HOOD CONTROL PANEL SHALL BE INSULATED SAME AS DOMESTIC HOT WATER LINES PER SPECIFICATION SECTION 15250.

GRAPHIC SCALE 1:50

THIS LENGTH OF SCALE REPRESENTS 5m ON PLAN

1m 2m 3m 4m 5m 6m

THIS LENGTH OF SCALE REPRESENTS 50mm ON PLAN

THIS LENGTH OF SCALE REPRESENTS 1m ON PLAN

ALL DIMENSIONS ARE MILLIMETERS (mm) UNLESS OTHERWISE NOTED.

US ARMY CORPS OF ENGINEERS SAVANNAH DISTRICT

DATE: 14JUL97	REV.
CATEGORY CODE 721-11-11	
SOLICITATION NO: DACA21-97-B-0055	
PLOT DATE: $$DATE$$$$$$	
PLOT SCALE:	

CONTRACT NO: DACA21-98-C-0022

U.S. ARMY ENGINEER DISTRICT CORPS OF ENGINEERS SAVANNAH, GEORGIA

SYMBOL	DESCRIPTION	BY	DATE
	AS BUILT	DGC	30SEP04
2	REVISED IN ACCORDANCE WITH MODIFICATION 98-22-H	SMW	17AUG98
1	GENERAL REVISIONS	SMW	30JUL97

RANGER BARRACKS COMPLEX
FORT BENNING, GEORGIA

DINING FACILITY

ENLARGED PLUMBING PLANS

PLATE REFERENCE NUMBER:

MP-3

SHEET 347

DESIGN FILE: DONSPEC$$$$$$

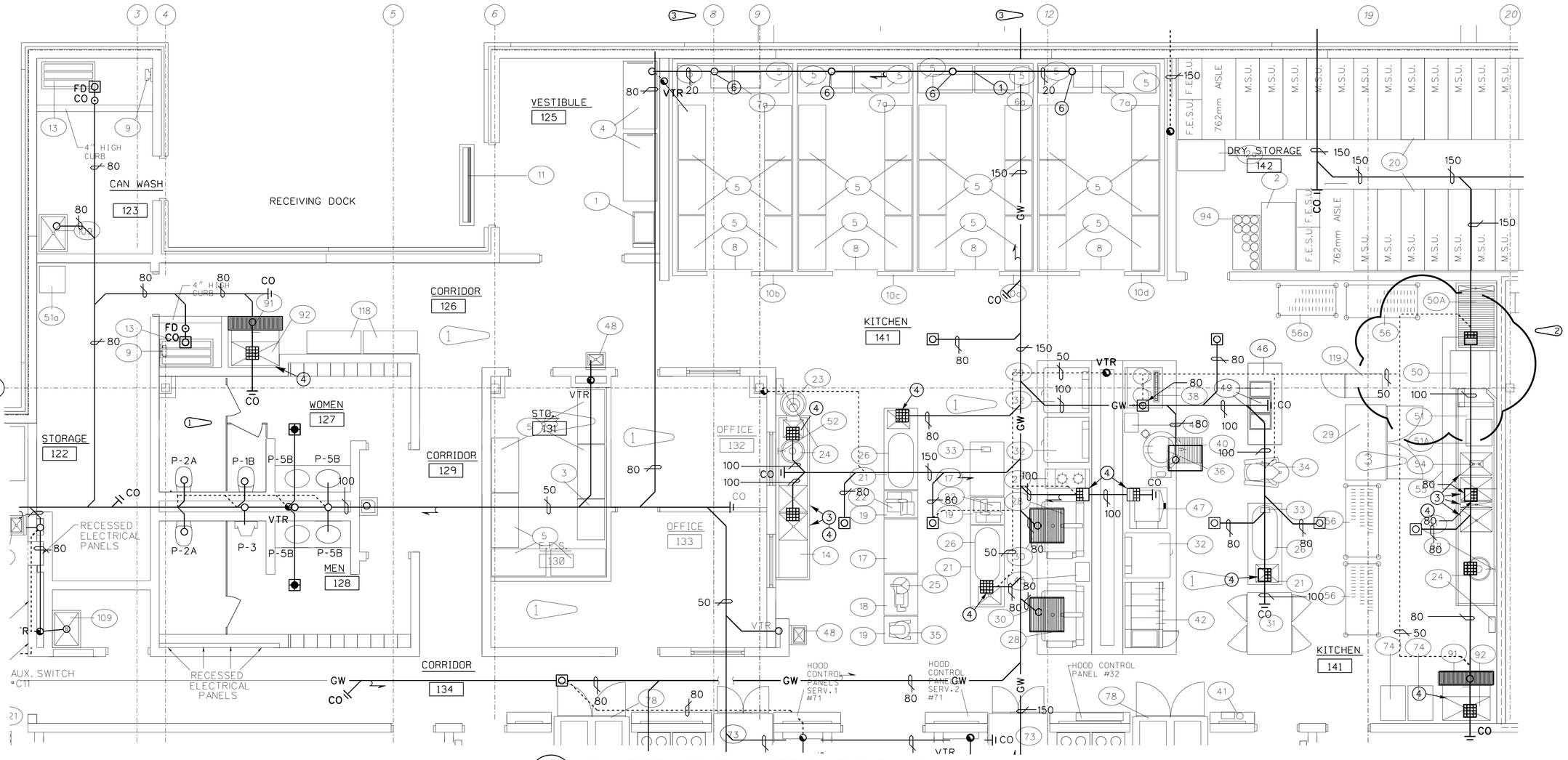

1 MP2 MP4

ENLARGED KITCHEN WASTE & VENT PLUMBING PLAN

SCALE: 1:50

GENERAL NOTES:

1. SEE GENERAL NOTES ON SHEET M-2
2. ALL FLOOR SINKS AND FLOOR DRAINS IN THE KITCHEN SHALL HAVE SCREWED CONNECTIONS OR GASKETING MATERIAL CAPABLE OF WITHSTANDING TEMPERATURES OF 120°C MINIMUM.

KEYED NOTES FOR KITCHEN WASTE & VENT PLUMBING:

1. INSTALL HEAT TAPE ON PIPING FROM 300mm UPSTREAM OF THE FREEZER TO 300mm DOWNSTREAM OF THE FREEZER.
2. RUN DRAINS TO FLOOR SINKS INDIVIDUALLY. DO NOT COMBINE PIPING.
3. EACH BASIN SHALL DRAIN TO THE FLOOR SINK INDEPENDENTLY.
4. USE COPPER TUBING FROM EQUIPMENT TO FLOOR SINK. TUBING SHALL BE FULL SIZE OF OPENING PROVIDED ON EQUIPMENT WITH 20mm THE MINIMUM SIZE ALLOWABLE. TERMINATE LINE 25mm ABOVE THE FLOOR SINK.
5. RUN CONDENSATE DRAIN LINE TO 25mm ABOVE FLOOR DRAIN BELOW.
6. CONDENSATE DRAIN LINE FROM REFRIGERATOR/FREEZER UNIT.

GRAPHIC SCALE 1:50

THIS LENGTH OF SCALE REPRESENTS 5m ON PLAN

1m 2m 3m 4m 5m 6m

THIS LENGTH OF SCALE REPRESENTS 50mm ON PLAN

THIS LENGTH OF SCALE REPRESENTS 1m ON PLAN

ALL DIMENSIONS ARE MILLIMETERS (mm) UNLESS OTHERWISE NOTED.

US ARMY CORPS OF ENGINEERS SAVANNAH DISTRICT

DATE: 14JUL97
CATEGORY CODE 721-11-11
SOLICITATION NO: DACA21-97-B-0055
PLOT DATE: $$DATE$$$$$$
PLOT SCALE: :
REV.
CONTRACT NO: DACA21-98-C-0022

U.S. ARMY ENGINEER DISTRICT CORPS OF ENGINEERS SAVANNAH, GEORGIA

SYMBOL	DESCRIPTION	DATE	BY
2	REVISED AS BUILT	30SEP04	DGC
1	REVISED IN ACCORDANCE WITH MODIFICATION 98-22-H CHANGE FIXTURE NUMBERS AT ROOMS 127 & 128	17AUG98	SWW
		30JUL97	SWW

RANGER BARRACKS COMPLEX
FORT BENNING, GEORGIA

DINING FACILITY

ENLARGED PLUMBING PLANS

PLATE REFERENCE NUMBER: MP-4

SHEET 348

RECORD DRAWING

DGNSPEC$$$$$$

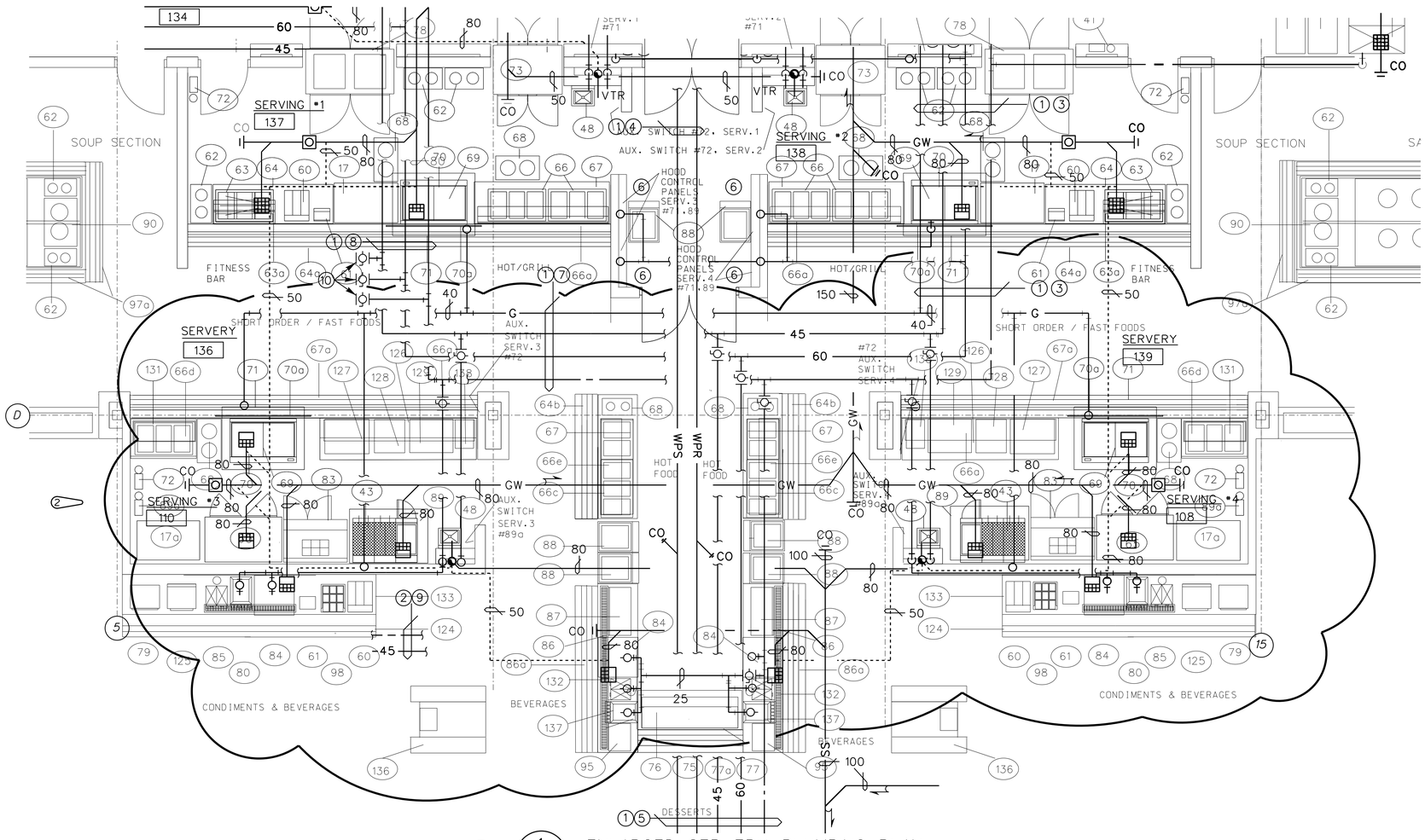

1 MP2MP5 ENLARGED SERVERY PLUMBING PLAN

SCALE: 1:50

SERVERY PLUMBING NOTES:

1. SEE GENERAL NOTES ON SHEET M-2
2. ALL FLOOR SINKS AND FLOOR DRAINS IN THE SERVERY SHALL HAVE SCREWED CONNECTIONS OR GASKETING MATERIAL CAPABLE OF WITHSTANDING TEMPERATURES OF 120°C MINIMUM.

KEYED NOTES FOR SERVERY PLUMBING:

1. PIPING IN CRAWL SPACE TO BE HUNG ON TRAPEZE HANGERS.
2. PIPING ABOVE CEILING TO BE HUNG ON TRAPEZE HANGERS.
3. 65mm DCW; 40mm-60°C; 50mm-45°C; 50mm GAS.
4. 80mm WPS; 80mm WPR.
5. 80mm WPS; 80mm WPR; 32mm-45°C; 25mm-60°C; 40mm DCW.
6. WATER LINES FROM HOOD CONTROL PANEL SHALL BE INSULATED SAME AS DOMESTIC HOT WATER LINES PER SPECIFICATION SECTION 15250.
7. 50mm DCW; 32mm-60°C; 40mm-45°C; 40mm GAS.
8. 50mm DCW; 25mm-45°C.
9. INSTALL VERTICAL DROP IN LINE WITH A FULL PORT BALL VALVE AND HOSE CONNECTION FOR BUILDING DRAIN.

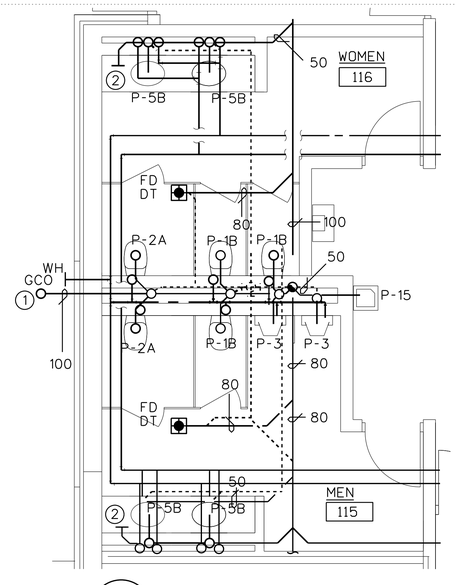

2 MP2MP5 TOILET AREA PLUMBING PLAN

SCALE: 1:50

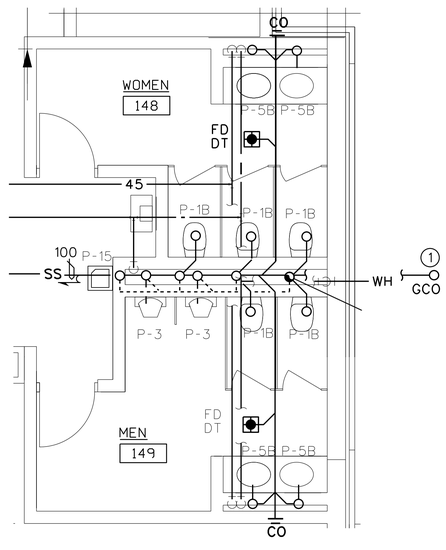

3 MP2MP5 TOILET AREA PLUMBING PLAN

SCALE: 1:50

GENERAL NOTES:

1. SEE GENERAL NOTES ON SHEET M-2

KEYED NOTES FOR TOILET AREA PLUMBING:

1. GRADE CLEANOUT. USE METALLIC CAP.
2. WALL CLEANOUT. INSTALL UNDER COUNTER.

GRAPHIC SCALE 1:50

THIS LENGTH OF SCALE REPRESENTS 5m ON PLAN

1m 2m 3m 4m 5m 6m

THIS LENGTH OF SCALE REPRESENTS 50mm ON PLAN

THIS LENGTH OF SCALE REPRESENTS 1m ON PLAN

ALL DIMENSIONS ARE MILLIMETERS (mm) UNLESS OTHERWISE NOTED.

US ARMY CORPS OF ENGINEERS SAVANNAH DISTRICT

DATE: 14JUL97	REV.
CATEGORY CODE 721-11-11	
SOLICITATION NO: DACA21-97-B-0055	
PLOT DATE: $$DATE$$$$$$	
PLOT SCALE: 1	

CONTRACT NO: DACA21-98-C-0022

U.S. ARMY ENGINEER DISTRICT CORPS OF ENGINEERS SAVANNAH, GEORGIA

SYMBOL	DESCRIPTION	DATE	BY
	AS BUILT		
2	REVISED IN ACCORDANCE WITH MODIFICATION 98-22-H	30SEP04	DGC
1	GENERAL REVISIONS.	17AUG98	SWW
		30JUL97	SWW

RANGER BARRACKS COMPLEX
FORT BENNING, GEORGIA

DINING FACILITY

ENLARGED PLUMBING PLANS

PLATE REFERENCE NUMBER: MP-5

SHEET 349

RECORD DRAWING

DESIGN FILE: DONSPEC$$$$$$

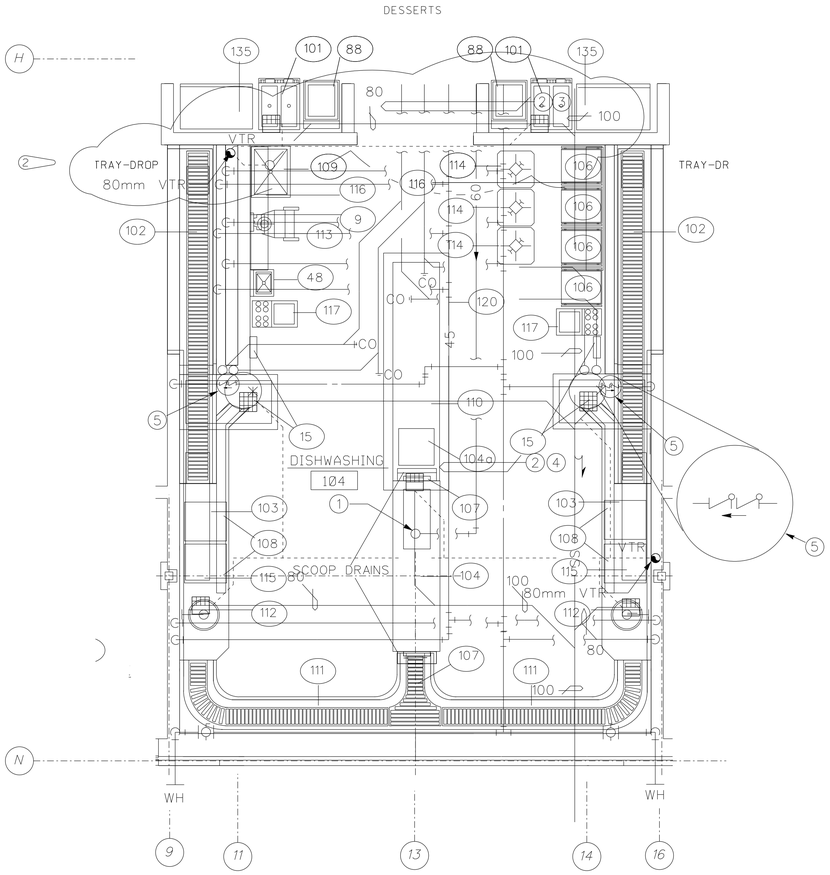

1 MP2 MP6 DISHWASHING AREA PLUMBING PLAN

SCALE: 1:50

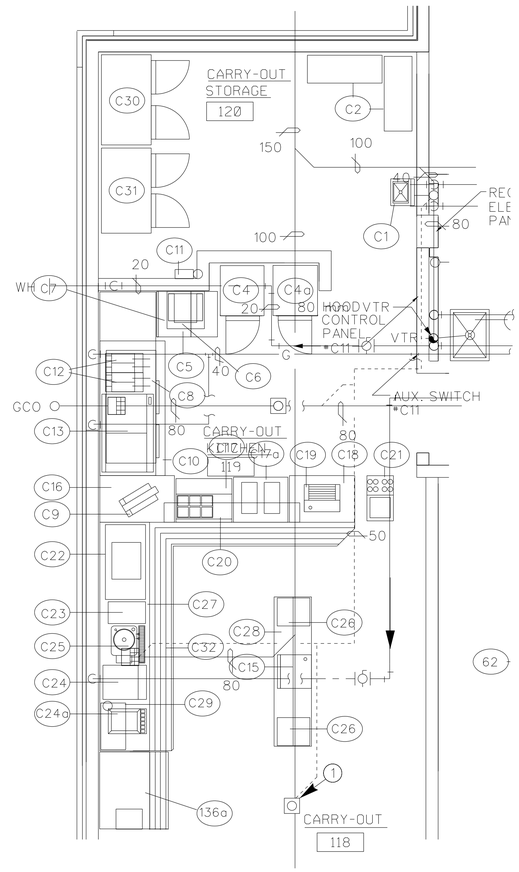

2 MP2 MP6 CARRY-OUT AREA PLUMBING PLAN

SCALE: 1:50

GENERAL NOTES:

1. SEE GENERAL NOTES ON SHEET M-2
2. ALL FLOOR SINKS AND FLOOR DRAINS IN THE DISHWASHING AREA SHALL HAVE SCREWED CONNECTIONS OR GASKETING MATERIAL CAPABLE OF WITHSTANDING TEMPERATURES OF 120°C MINIMUM.

KEYED NOTES FOR DISHWASHING AREA PLUMBING:

1. COORDINATE PIPE PENETRATION OF FLOOR WITH DISHWASHER MANUFACTURER REQUIREMENTS.
2. PIPING IN CRAWL SPACE TO BE HUNG ON TRAPEZE HANGERS.
3. 80mm WPS; 80mm WPR; 32mm-45°C; 25mm-60°C; 40mm DCW.
4. 25mm-60°C; 25mm-45°C; 32mm DCW.
5. DOUBLE CHECK BACKFLOW ASSEMBLY.

GENERAL NOTES:

1. SEE GENERAL NOTES ON SHEET M-2
2. ALL FLOOR SINKS AND FLOOR DRAINS IN THE CARRY OUT AREA SHALL HAVE SCREWED CONNECTIONS OR GASKETING MATERIAL CAPABLE OF WITHSTANDING TEMPERATURES OF 120°C MINIMUM.

KEYED NOTES FOR CARRY OUT AREA PLUMBING:

1. 80mm FLOOR DRAIN

GRAPHIC SCALE 1:50

THIS LENGTH OF SCALE REPRESENTS 5m ON PLAN

1m 2m 3m 4m 5m 6m

THIS LENGTH OF SCALE REPRESENTS 50mm ON PLAN

THIS LENGTH OF SCALE REPRESENTS 1m ON PLAN

ALL DIMENSIONS ARE MILLIMETERS (mm) UNLESS OTHERWISE NOTED.

US ARMY CORPS OF ENGINEERS
SAVANNAH DISTRICT

DATE: 14JUL97
REV.
CATEGORY CODE 721-11-11
SOLICITATION NO: DACA21-97-B-0055
PLOT DATE: $$DATE$$$$$$
PLOT SCALE:
CONTRACT NO: DACA21-98-C-0022

U.S. ARMY ENGINEER DISTRICT
CORPS OF ENGINEERS
SAVANNAH, GEORGIA

SYMBOL	DESCRIPTION	BY	DATE
2	AS BUILT		30SEP04
1	REVISED IN ACCORDANCE WITH MODIFICATION 98-22-H	SWW	17AUG98
	GENERAL REVISIONS	SWW	30JUL97

RANGER BARRACKS COMPLEX
FORT BENNING, GEORGIA

DINING FACILITY

ENLARGED PLUMBING PLANS

PLATE REFERENCE NUMBER:
MP-6
SHEET 350

RECORD DRAWING

DESIGN FILE: DONSPEC$$$$$$

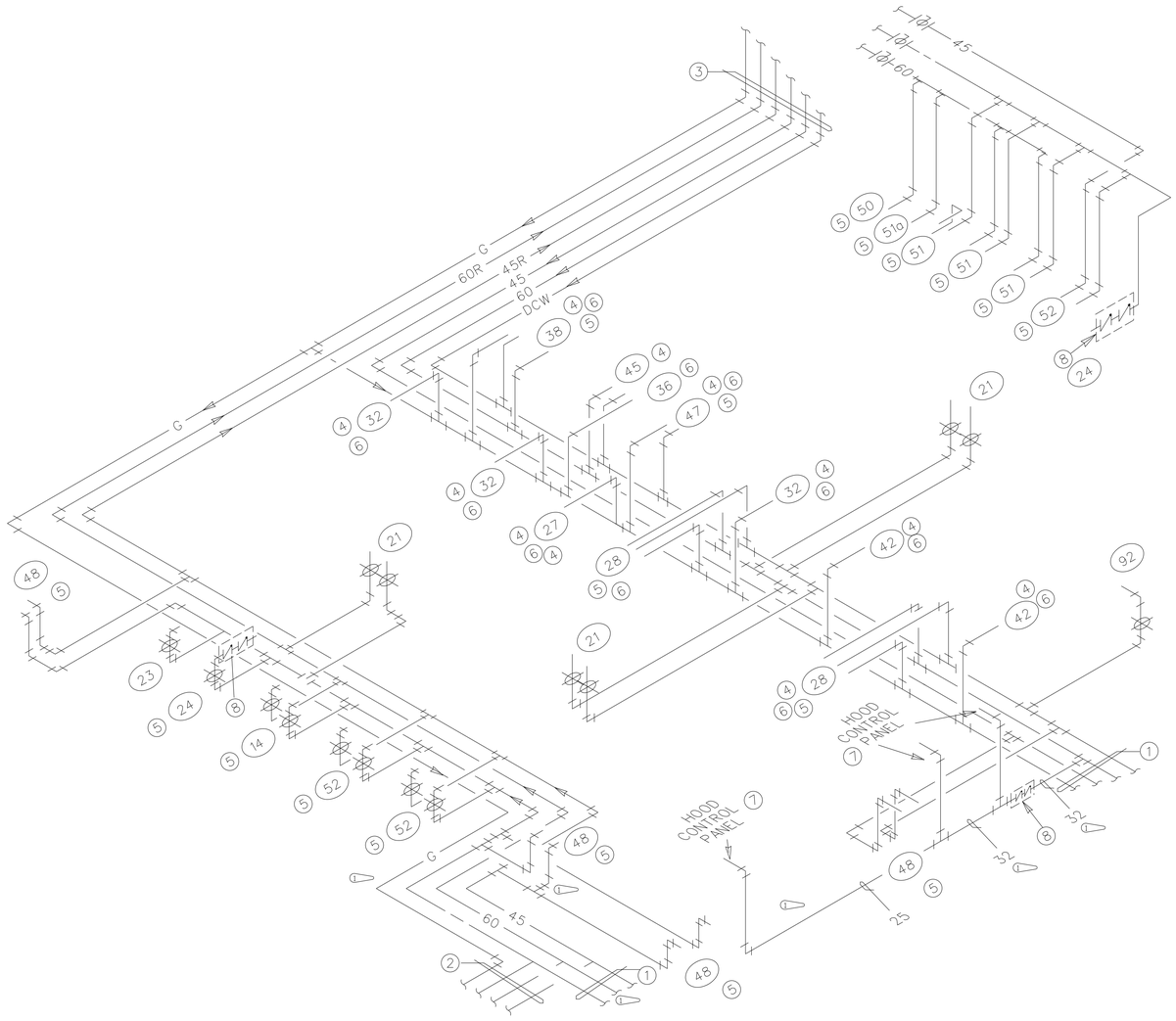

R/1 KITCHEN AREA SUPPLY PIPING RISER DIAGRAM

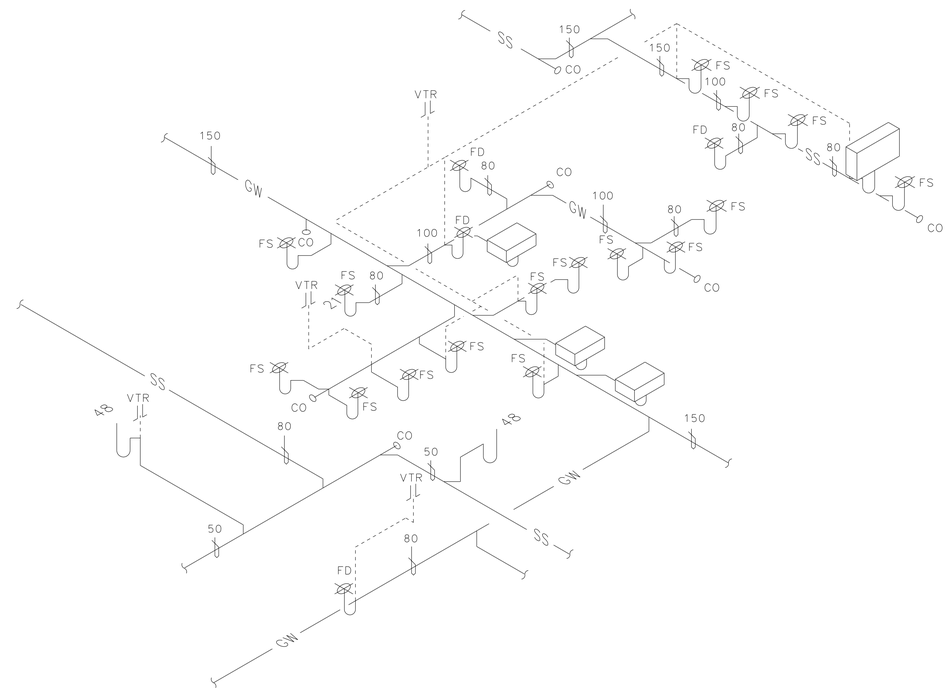

R/2 KITCHEN AREA WASTE & VENT PIPING RISER DIAGRAM

KEYED NOTES FOR KITCHEN SUPPLY RISER:

1. PIPES CONTINUE TO SERVERY. SEE RISER R-3, SHEET MP-7A FOR CONTINUATION.
2. SEE SHEET MP-2 FOR CONTINUATION.
3. PIPES CONTINUE UP CHASE TO MECHANICAL ROOM.
4. SEE DETAIL 3, SHEET MP-12 FOR GAS CONNECTION TO EQUIPMENT.
5. SEE DETAIL 5, SHEET MP-12 FOR WATER CONNECTIONS TO EQUIPMENT
6. PIPING TO EQUIPMENT RUNS IN CHASE.
7. 60° C WATER TO EXHAUST HOOD CONTROL PANEL. RUN WASHDOWN PIPING AS PER MANUFACTURER'S INSTRUCTIONS.
8. INSTALL A DOUBLE CHECK BACKFLOW ASSEMBLY.

US ARMY CORPS OF ENGINEERS SAVANNAH DISTRICT

DATE: 14JUL97
REV.
CATEGORY CODE 721-11-11
SOLICITATION NO: DACA21-97-B-0055
PLOT DATE: $$DATE$$$$$$
PLOT SCALE:
CONTRACT NO: DACA21-98-C-0022

U.S. ARMY ENGINEER DISTRICT
CORPS OF ENGINEERS
SAVANNAH, GEORGIA

SYMBOL	DESCRIPTION	BY	DATE
1	AS BUILT REVISE RISER DIAGRAM R-1	SWW	30JUL97
		DGC	30SEP04

RANGER BARRACKS COMPLEX
FORT BENNING, GEORGIA

DINING FACILITY
PLUMBING RISER DIAGRAMS

PLATE REFERENCE NUMBER:
MP-7
SHEET 351

RECORD DRAWING

DESIGN FILE: DONSPEC$$$$$$

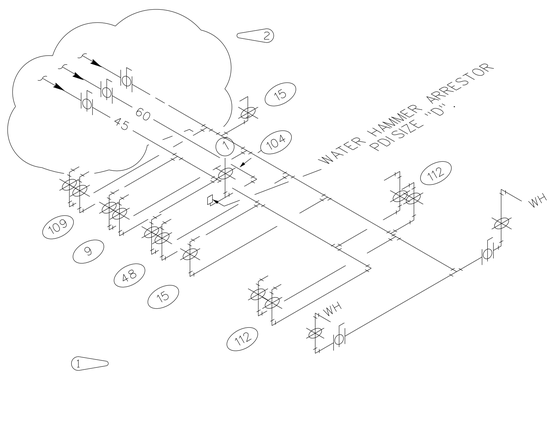

R 5 DISHWASHING AREA SUPPLY PIPING RISER DIAGRAM

1

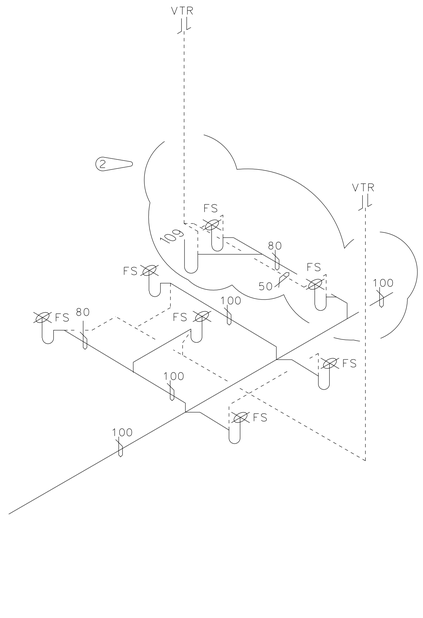

R 6 DISHWASHING AREA WASTE & VENT RISER DIAGRAM

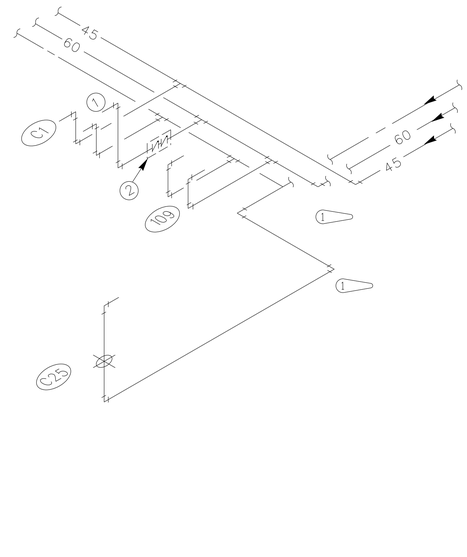

R 7 CARRY-OUT AREA SUPPLY PIPING RISER DIAGRAM

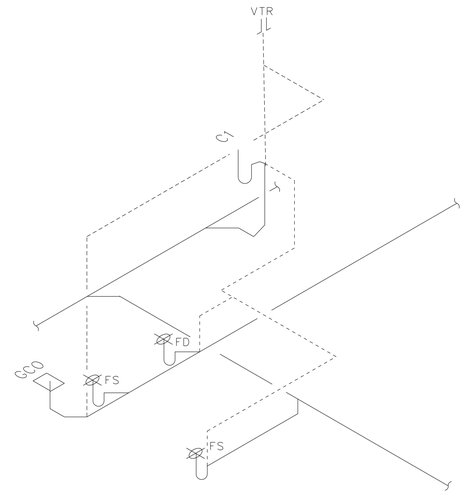

R 8 CARRY-OUT AREA WASTE & VENT RISER DIAGRAM

KEYED NOTES FOR DISHWASHING SUPPLY RISER:

1. INSTALL PRESSURE REGULATING VALVE ABOVE FLOOR AT DISHWASHER. SET PRESSURE AS REQUIRED BY DISHWASHER MANUFACTURER.

KEYED NOTES FOR CARRY-OUT SUPPLY RISER:

1. TO EXHAUST HOOD CONTROL PANEL.
2. DOUBLE CHECK BACKFLOW ASSEMBLY.

US ARMY CORPS OF ENGINEERS
SAVANNAH DISTRICT

DATE: 14JUL97
REV.
CATEGORY CODE 721-11-11
SOLICITATION NO: DACA21-97-B-0055
PLOT DATE: $$DATE$$$$$$
PLOT SCALE: :
CONTRACT NO: DACA21-98-C-0022

U.S. ARMY ENGINEER DISTRICT
CORPS OF ENGINEERS
SAVANNAH, GEORGIA

SYMBOL	DESCRIPTION	DATE	BY
2	AS BUILT	30SEP04	DGC
1	REVISED IN ACCORDANCE WITH MODIFICATION 98-22-H	17AUG98	SWW
	REVISE RISER DIAGRAMS R-5 & R-6	30JUL97	SWW

RANGER BARRACKS COMPLEX
FORT BENNING, GEORGIA

DINING FACILITY
PLUMBING RISER DIAGRAMS

PLATE REFERENCE NUMBER:
MP-8
SHEET 352

RECORD DRAWING

DESIGN FILE: DONSPEC$$$$$$

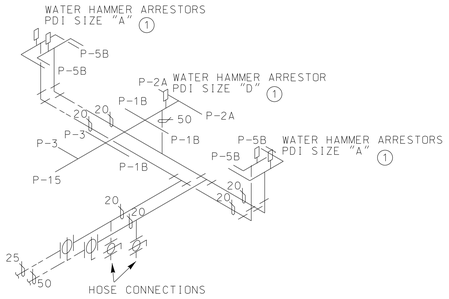

KEYED NOTE:

1. INCLUDE ACCESS PANEL. COLOR TO MATCH ADJACENT MATERIAL. ACCESS PANELS BEHIND SINKS ARE TO BE INSTALLED UNDER THE COUNTER.

R 9 RM 115 & 116 TOILET SUPPLY PIPING RISER

NOT TO SCALE

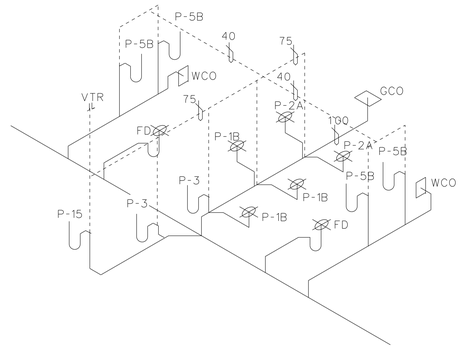

R 10 RM 115 & 116 TOILET WASTE & VENT RISER

NOT TO SCALE

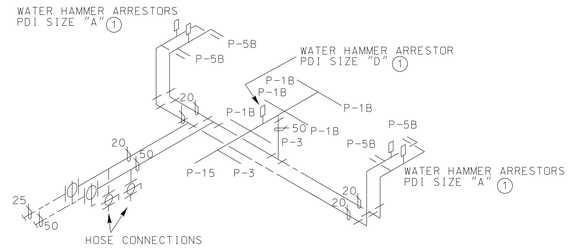

NOTE:

1. INCLUDE ACCESS PANEL. COLOR TO MATCH ADJACENT MATERIAL. ACCESS PANELS BEHIND SINKS ARE TO BE INSTALLED UNDER THE COUNTER.

R 11 RM 148 & 149 TOILET SUPPLY PIPING RISER

NOT TO SCALE

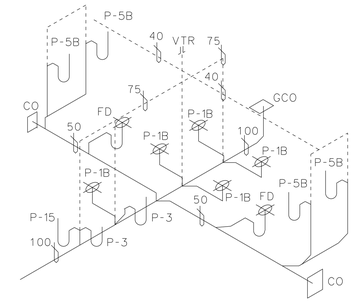

R 12 RM 148 & 149 TOILET WASTE & VENT RISER

NOT TO SCALE

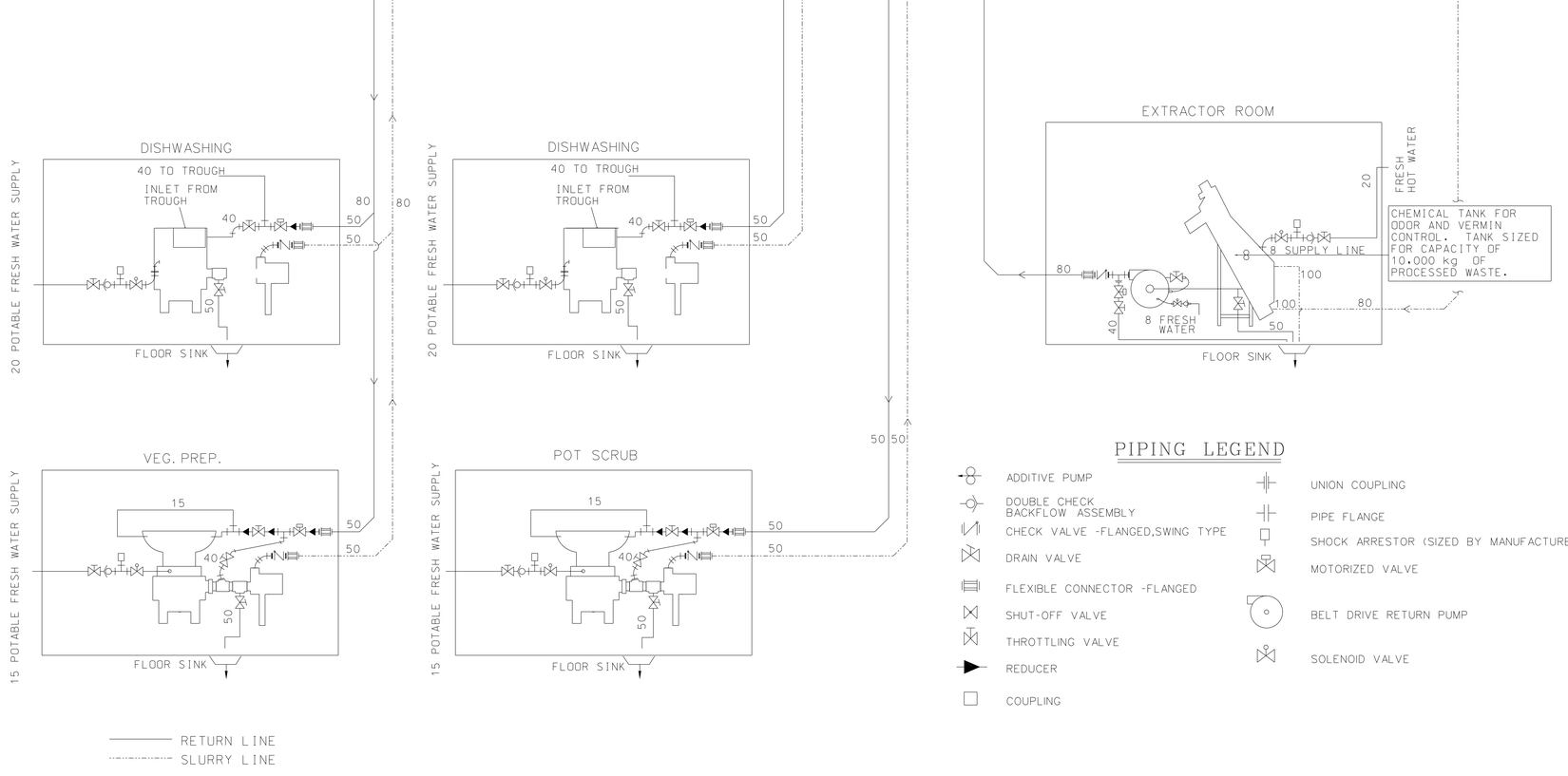

R 13 WASTE PULPING SYSTEM PIPING SCHEMATIC

NOT TO SCALE

GENERAL NOTE: PIPING, VALVES AND ASSOCIATED DEVICES SHOWN ARE THE MINIMUM REQUIRED TO PERFORM THE SPECIFIED FUNCTION. ALTERNATE PIPING ARRANGEMENTS ARE ACCEPTABLE.

PIPING LEGEND

- ADDITIVE PUMP
- DOUBLE CHECK BACKFLOW ASSEMBLY
- CHECK VALVE -FLANGED,SWING TYPE
- DRAIN VALVE
- FLEXIBLE CONNECTOR -FLANGED
- SHUT-OFF VALVE
- THROTTLING VALVE
- REDUCER
- COUPLING
- UNION COUPLING
- PIPE FLANGE
- SHOCK ARRESTOR (SIZED BY MANUFACTURER)
- MOTORIZED VALVE
- BELT DRIVE RETURN PUMP
- SOLENOID VALVE

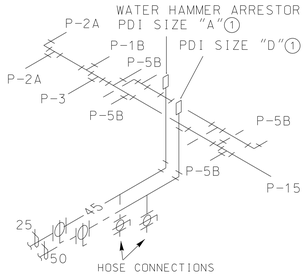

NOTE:

1. INCLUDE ACCESS PANEL. COLOR TO MATCH ADJACENT MATERIAL. ACCESS PANELS BEHIND SINKS ARE TO BE INSTALLED UNDER THE COUNTER.

R 14 RM 127 & 128 TOILET SUPPLY PIPING RISER

NOT TO SCALE

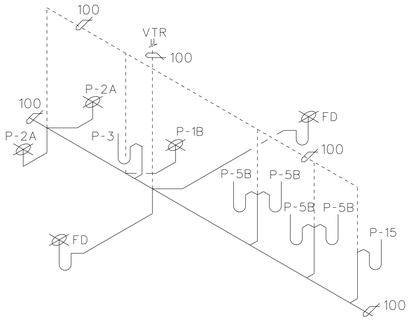

R 15 RM 127 & 128 TOILET WASTE & VENT RISER

NOT TO SCALE

US ARMY CORPS OF ENGINEERS SAVANNAH DISTRICT

DATE: 14JUL97	REV.
CATEGORY CODE 721-11-11	
SOLICITATION NO: DACA21-97-B-0055	
PLOT DATE: $$DATE$$$$$$	
PLOT SCALE:	

CONTRACT NO: DACA21-98-C-0022

U.S. ARMY ENGINEER DISTRICT CORPS OF ENGINEERS SAVANNAH, GEORGIA

SYMBOL	DESCRIPTION	DATE	BY
	AS BUILT	30SEP04	DGC

RANGER BARRACKS COMPLEX FORT BENNING, GEORGIA

DINING FACILITY

PLUMBING RISER DIAGRAMS

PLATE REFERENCE NUMBER: MP-9

SHEET 353

RECORD DRAWING

DESIGN FILE: DONSPEC$$$$$$