RECREATIONAL VEHICLE PARK

MARINE CORPS AIR STATION - CHERRY POINT, NORTH CAROLINA

TASK ORDER # NAFBA1-11-F-0440
CONTRACT # NAFBA1-05-D-0034
HASKELL JOB # 6601490

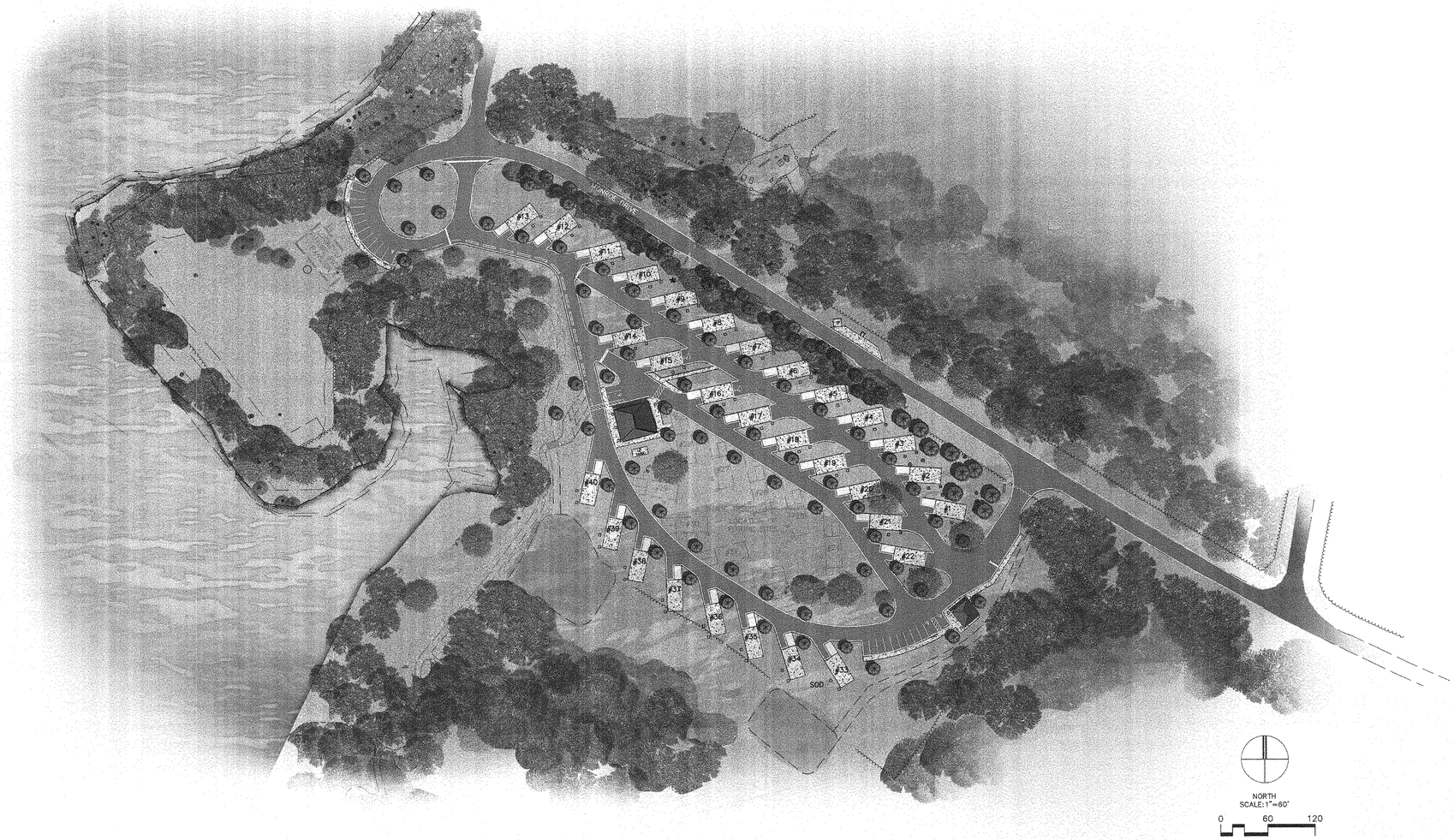

HASKELL
ARCHITECTS AND ENGINEERS

FINAL CONSTRUCTION DOCUMENTS
11 JUNE 2012

SAFETY ALERT SYSTEM

GENERAL

THE DRAWINGS FOR THIS PROJECT CONTAIN SAFETY ITEMS TO PROMOTE AWARENESS OF SAFETY ON THE JOB SITE. THE DRAWINGS CONTAIN SAFETY ALERT NOTES AND A SYMBOL TO IDENTIFY GENERAL LOCATIONS WHICH MAY BE SAFETY HAZARDS. THE SAFETY ALERT SYSTEM IS PROVIDED FOR INFORMATIONAL PURPOSES ONLY, AND IS NOT INTENDED TO ENCOMPASS ALL POTENTIAL SAFETY CONCERNS INHERENT IN THE PROSECUTION OF THE WORK.

SAFETY RESPONSIBILITIES

THE SAFETY ALERT SYSTEM SHALL IN NO WAY LIMIT OR ALTER THE SAFETY RESPONSIBILITIES IMPOSED UPON EACH SUBCONTRACTOR OR SUB-SUBCONTRACTOR OR VENDOR BY THEIR CONTRACT. NEITHER THE CONTRACTOR NOR THE CERTIFYING PROFESSIONALS ASSUME ANY PROFESSIONAL SAFETY RESPONSIBILITIES OR LIABILITY BY PROVIDING THE SAFETY ALERT SYSTEM NOR IS THE CONTRACTOR RESPONSIBLE FOR PROFESSIONAL SAFETY INSPECTIONS. BY PROVIDING THE SAFETY ALERT SYSTEM, THE CONTRACTOR IS NOT ASSUMING ANY RESPONSIBILITY AS TO THE MEANS AND METHODS OF PERFORMING THE WORK AND/OR THE MEANS AND METHODS OF COMPLYING WITH SAFETY REQUIREMENTS CONTAINED IN SUBCONTRACT AGREEMENTS, SUB-SUBCONTRACT AGREEMENTS, VENDOR AGREEMENTS OR OTHER APPLICABLE SAFETY REGULATIONS.

THE FOLLOWING ARE GENERAL SAFETY PRECAUTIONS PROVIDED BY THE HASKELL COMPANY'S SAFETY MANAGER. CHECK ALL APPLICABLE LAWS AND REGULATIONS FOR DETAILED INFORMATION.

SLIPS/FALLS

UTILIZE FALL PROTECTION SYSTEMS AND PERSONAL FALL ARREST SYSTEMS (PFAS) AT ELEVATIONS OF 6-FEET OR GREATER PROVIDE GUARDRAILS AT 42-INCHES WITH MIDRAILS AND TOEBOARDS PROVIDE FLOOR COVERS FOR OPENINGS 2-INCHES OR GREATER. LABEL AND SECURE UTILIZE FULL BODY HARNESS WITH SHOCK ABSORBING LANYARD WHEN IN PFAS PROVIDE SECURE ATTACHMENT WHEN WORKING FROM AERIAL LIFTS

ELECTROCUTION

USE GFCI PROTECTION FOR ALL TEMPORARY POWER, GENERATORS, AND EXISTING POWER COVER OR BARRICADE ENERGIZED PANELS AT ALL TIMES CHECK ELECTRICAL POWER CORDS FOR DAMAGE PRIOR TO EACH USE MAINTAIN ADEQUATE TEMPORARY LIGHTING PRIOR TO BEGINNING WORK AT AN EXISTING FACILITY OR WITH EXISTING UTILITIES, LOCK OUT OF SERVICE ACTIVE OR POTENTIALLY ACTIVE ENERGY SYSTEMS LOCK OUT OF SERVICE NEW CONSTRUCTION TIE-IN TO EXISTING MECHANICAL, ELECTRICAL, PIPING AND SIMILAR ENERGY RELATED SYSTEMS TAKE PRECAUTIONS AND DE-ENERGIZE OVERHEAD POWER LINES PRIOR TO BEGINNING ANY CRANE WORK IN CLOSE PROXIMITY OF OVERHEAD POWER LINES

CAVE-INS

VERIFY LOCATION OF ALL UNDERGROUND UTILITIES PRIOR TO START OF WORK UTILIZE SLOPE/SHORING FOR ALL EXCAVATIONS 4-FEET OR GREATER IN DEPTH USE ENGINEERED DESIGNS FOR EXCAVATIONS OF 20-FEET OR GREATER IN DEPTH PROVIDE LADDER OR SIMILAR ACCESS/EGRESS FROM ALL EXCAVATIONS WITH TRAVEL DISTANCE NOT EXCEEDING 25-FEET MAINTAIN SPOILS A MINIMUM OF 2-FEET FROM EXCAVATION EDGE PROVIDE DAILY INSPECTION OF ALL EXCAVATIONS BY A COMPETENT PERSON

FALLS FROM ELEVATION

PROVIDE STANDARD HANDRAILS OR PERSONAL FALL ARREST SYSTEM (PFAS) AT HEIGHTS OF 6-FEET OR GREATER ENSURE ALL SCAFFOLD BASEPLATES HAVE SUFFICIENT MUD SILLS/SUPPORT PROVIDE LADDER ACCESS TO ALL SCAFFOLDS INSPECT SCAFFOLDS PRIOR TO EACH SHIFT USE COMPETENT PERSON TO ERECT, DISMANTLE, MOVE, ALTER, AND INSPECT SCAFFOLDING PROVIDE TOEBOARDS TO PROTECT THOSE WORKING BELOW FILL TREAD PANS BEFORE USING STAIRWAYS PROVIDE HANDRAILS ON OPEN SIDES OF STAIRS OVER 30-INCHES OR 4 RISERS HIGH PROVIDE STAIRS, LADDERS, OR RAMPS FOR ELEVATION CHANGES OF 19-INCHES OR MORE SECURE ALL LADDERS AND EXTEND A MINIMUM OF 36-INCHES ABOVE THE DECK ELEVATION TO BE ACCESSED

STRUCK BY/AGAINST/CAUGHT

PROVIDE A MASONRY CONTROLLED ACCESS ZONE (CAZ) ON THE BACKSIDE OF A WALL EQUAL TO THE HEIGHT OF THE WALL PLUS 4-FEET. PROVIDE TEMPORARY BRACING OF MASONRY WALLS OVER 8-FEET IN HEIGHT ONLY ESSENTIAL PERSONNEL INVOLVED IN POST-TENSIONING OPERATIONS SHALL BE PERMITTED IN THE AREA PROVIDE IMPALEMENT PROTECTION FOR ALL VERTICAL REINFORCING, CONDUIT, AND SIMILAR HAZARDS ADHERE TO "CRITICAL LIFT PROCEDURES" FOR LOADS OVER 75% OF CAPACITY ONLY PERSONNEL DIRECTLY INVOLVED WITH TILT-UP OR PRECAST OPERATIONS ARE TO BE PERMITTED IN THE AREA CONDUCT A PRE-LIFT SAFETY MEETING FOR ALL TILT-UP AND PRECAST ERECTION. INSPECT ALL RIGGING, SLINGS, AND CHOKERS PRIOR TO EACH USE ENSURE ALL CRANE CERTIFICATIONS AND OPERATOR QUALIFICATIONS ARE PROVIDED.

ASPHYXIATION - CONFINED SPACE

DO NOT ALLOW EXTENDED OCCUPANCY OF TANKS, PITS, VAULTS, AND SIMILAR LIMITED ACCESS LOCATIONS USE SPECIAL PRECAUTIONS FOR CONFINED SPACE LOCATIONS, WHICH MAY INCLUDE A PERMIT-SPACE SYSTEM AND AIR MONITORING.

DEMOLITION HAZARD

UTILIZE CONTROLLED ACCESS ZONES (CAZ) FOR ALL DEMOLITION WORK TO PREVENT UNAUTHORIZED PERSONNEL FROM ENTERING THE AREA.

STRUCK BY - STEEL ERECTION

UTILIZE CONTROLLED DECKING ZONE (CDZ) PROCEDURES WHEN INSTALLING ROOF AND INTERMEDIATE FLOOR DECKING UTILIZE FALL PROTECTION SYSTEMS AND PERSONAL FALL ARREST SYSTEM (PFAS) AT ELEVATIONS OF 6-FEET OR GREATER PROVIDE MINIMUM OF FOUR (4) ANCHOR BOLT CONNECTIONS FOR EACH COLUMN PRIOR TO FURTHER ERECTION OF STRUCTURE. ADHERE TO REQUIREMENTS OUTLINED IN OSHA 1926 SUBPART "R" AT ALL TIMES WITH THE EXCEPTION THAT 100% FALL PROTECTION REQUIRED AT ELEVATIONS 6-FEET OR GREATER CONDUCT A PRE-CONSTRUCTION SAFETY MEETING FOR ALL STEEL ERECTION INSPECT ALL RIGGING, SLINGS, AND CHOKERS PRIOR TO EACH USE ENSURE ALL CRANE CERTIFICATIONS AND OPERATOR QUALIFICATIONS ARE PROVIDED ENSURE CRANES ARE INSPECTED DAILY BY A COMPETENT PERSON/OPERATOR.

DROWNING HAZARD

SUBCONTRACTOR SHALL MEET ALL SAFETY REQUIREMENTS OUTLINED IN CFR 1910.401 THROUGH CFR 1910.440 AND CFR 1926.106 RELATED TO COMMERCIAL DIVING OPERATIONS AND WORKING OVER WATER.

ABBREVIATIONS

DRAWING INDEX

GENERAL

G-000 COVER SHEET
G-001 INDEX OF DRAWINGS

CIVIL

C-000C COVER SHEET
C-000 EXISTING SITE PLAN
C-001 EXISTING SITE PLAN
C-002 PROPOSED OVERALL SITE PLAN
CD-110 SITE DEMOLITION PLAN
CD-111 SITE DEMOLITION PLAN
C-110 SITE GEOMETRY PLAN
C-111 SITE GEOMETRY PLAN
C-120 SITE UTILITIES PLAN
C-121 SITE UTILITIES PLAN
C-130 GRADING AND DRAINAGE PLAN
C-131 GRADING AND DRAINAGE PLAN
C-140 PRE-DEVELOPMENT DRAINAGE PLAN
C-150 POST-DEVELOPMENT DRAINAGE PLAN
C-160 EROSION & SEDIMENT CONTROL PLAN
C-161 EROSION & SEDIMENT CONTROL PLAN
C-220 SANITARY SEWER PROFILES
C-510 SITE DETAILS
C-511 SITE DETAILS
C-512 DUMP STATION DETAILS
C-520 UTILITY DETAILS
C-521 UTILITY DETAILS
C-530 GRADING & DRAINAGE DETAILS
C-531 GRADING & DRAINAGE DETAILS
C-540 EROSION & SEDIMENT CONTROL DETAILS
C-541 EROSION & SEDIMENT CONTROL DETAILS
C-542 STORMWATER POLLUTION PREVENTION PLAN

LANDSCAPE

L-110 LANDSCAPE PLAN

STRUCTURAL

S-001 GENERAL STRUCTURES NOTES (1 OF 3)
S-002 GENERAL STRUCTURAL NOTES (2 OF3)
S-003 GENERAL STRUCTURAL NOTES (3 OF 3)
S-110 BATH HOUSE & LAUNDRY FOUNDATION & FRAMING PLANS
S-111 OFFICE CHECK-IN FOUNDATION & FRAMING PLANS
S-510 FOUNDATION SECTIONS & DETAILS
S-511 ROOF FRAMING SECTIONS & DETAILS

ARCHITECTURAL

AS-110 ARCHITECTURAL SITE PLAN
AS-111 ARCHITECTURAL SITE PLAN DETAILS
A-110 BATH HOUSE & LAUNDRY PLANS
A-111 OFFICE CHECK-IN PLANS
A-210 BATH HOUSE ELEVATIONS & SECTIONS
A-211 OFFICE CHECK-IN ELEVATIONS & SECTIONS
A-310 WALL SECTIONS & DETAILS
A-410 BATH HOUSE - ENLARGED PLANS & INTERIOR ELEVATIONS
A-411 OFFICE CHECK-IN ENLARGED PLANS & INTERIOR ELEVATIONS
A-601 WALL TYPES & DETAILS
A-610 DOOR SCHEDULE, ELEVATIONS & DETAILS
A-611 WINDOW ELEVATIONS & DETAILS

PLUMBING

P-001 PLUMBING LEGEND, NOTES & ABBREVIATIONS
P-110 PLUMBING DRAINAGE FLOOR PLAN
P-111 PLUMBING UTILITIES FLOOR PLAN
P-501 PLUMBING DETAILS
P-601 PLUMBING SCHEDULES
P-701 PLUMBING RISERS

MECHANICAL

M-001 HVAC LEGENDS, NOTES & SCHEDULES
M-111 HVAC FLOOR PLANS

ELECTRICAL

E-001 ELECTRICAL LEGEND
ED101 ELECTRICAL DEMOLITION SITE PLAN
ED102 ELECTRICAL DEMOLITION SITE PLAN
E-101 ELECTRICAL SITE PLAN
E-102 ELECTRICAL SITE PLAN
EP101 ELECTRICAL POWER & SYSTEMS PLAN
EL101 ELECTRICAL LIGHTING PLAN
E-501 ELECTRICAL DETAILS
E-502 ELECTRICAL DETAILS
E-503 ELECTRICAL DETAILS
E-601 ELECTRICAL RISER DIAGRAMS
E-602 ELECTRICAL SCHEDULES
E-603 ELECTRICAL SCHEDULES
E-604 ELECTRICAL SCHEDULES
E-605 FIRE ALARM REPORTING SYSTEM RISER

DRAWING SYMBOLS

BUILDING SECTION IDENTIFICATION
A / A304 — DIRECTION SECTION IS BEING VIEWED; SECTION IDENTIFICATION; DRAWING NO. WHERE SECTION IS SHOWN

ELEVATION IDENTIFICATION
2 / A407 — ELEVATION IDENTIFICATION; DIRECTION ELEVATION IS BEING VIEWED; DRAWING NO. WHERE SECTION IS SHOWN

WALL SECTION / DETAIL IDENTIFICATION
2 / 312 — DETAIL IDENTIFICATION; DRAWING NO. WHERE DETAIL IS SHOWN

ROOM IDENTIFICATION
OFFICE / 1101 / 123 SF — ROOM NAME; ROOM NUMBER; ROOM SQUARE FEET (NET)

DOOR IDENTIFICATION
101A — DOOR NUMBER

WALL IDENTIFICATION
2A — WALL TYPE

GLAZING IDENTIFICATION
W3 — GLAZING TYPE

ELEVATION IDENTIFICATION
0'-0" FIN. FL. — ELEVATION; DESCRIPTION OF ELEVATION

EQUIPMENT IDENTIFICATION
ERO1 — REFER TO OWNER FURNISHED EQUIPMENT BOOKS

HASKELL ARCHITECTS and ENGINEERS, P.A.
NORTH CAROLINA - Architecture # 51202, Engineering # C-2136
HASKELL®
The Haskell Company
111 Riverside Avenue
Jacksonville, Florida 32202
Phone # (904) 791-4500

MARINE CORPS AIR STATION CHERRY POINT
RECREATIONAL VEHICLE PARK
CHERRY POINT, NORTH CAROLINA

DATE	ISSUE/REVISION
6/11/12	FINAL CD
6/4/12	CI
4/9/12	OPT.2_95%
7/14/11	QDP

We hereby expressly reserve the property rights to this drawing and it is not to be reproduced or copied in any format or manner whatsoever without first obtaining our express written permission and consent.

DRAWN BY: MED
CHECKED BY: CWK
AE JOB NUMBER: 6601490

INDEX OF DRAWINGS

G-001
SHEET NUMBER

6/11/2012 12:16:08 PM
c:\Revit_Local\6601490\M(BATHHOUSE)-metallibe.RVT

6601300
ENGINEERING PLANS FOR M.C.A.S. CHERRY POINT RECREATIONAL VEHICLE PARK CHERRY POINT, NORTH CAROLINA

CIVIL ENGINEERING LEGEND

EXISTING	PROPOSED	DESCRIPTION
		PROPERTY/RIGHT-OF-WAY LINE
		CENTERLINE
		SECTION,TOWNSHIP,RANGE LINE
		FENCE
		EROSION CONTROL FENCE
		RETAINING WALL
		BUILDING
		PAVEMENT/SIDEWALK/CURB LINE
25.50	25.50	SPOT ELEVATIONS
25	25	CONTOURS
SA	SA C.O.	SANITARY SEWER /CLEAN OUT
ST	ST	STORM SEWER
W	W	DOMESTIC WATER
F	F	FIRE MAIN
G	G	GAS MAIN
FM	FM	FORCE MAIN
UE	UE	UNDERGROUND ELECTRIC
OHE	OHE	OVERHEAD ELECTRIC
UT	UT	UNDERGROUND TELEPHONE
OT	OT	OVERHEAD TELEPHONE
UD	UD	UNDERDRAIN
		FIRE HYDRANT
		DOUBLE CHECK VALVE ASSEMBLY
R.P.	R.P.	RED.PRESSURE BACKFLOW PREVENTER
PIV F	PIV F	POST INDICATOR VALVE
		VALVE
		VALVE & BOX
		MANHOLE
		WATER METER
		PHONE/POWER/LIGHT POLE
		INLET
		MITERED END
		FLUME
		HEADWALL/ENDWALL
		TRANSFORMER
	ST-1	DRAINAGE STRUCTURE NUMBER
	SA-1	SANITARY SEWER STRUCTURE NUMBER
		SECTION CUT
		DETAIL REFERENCE

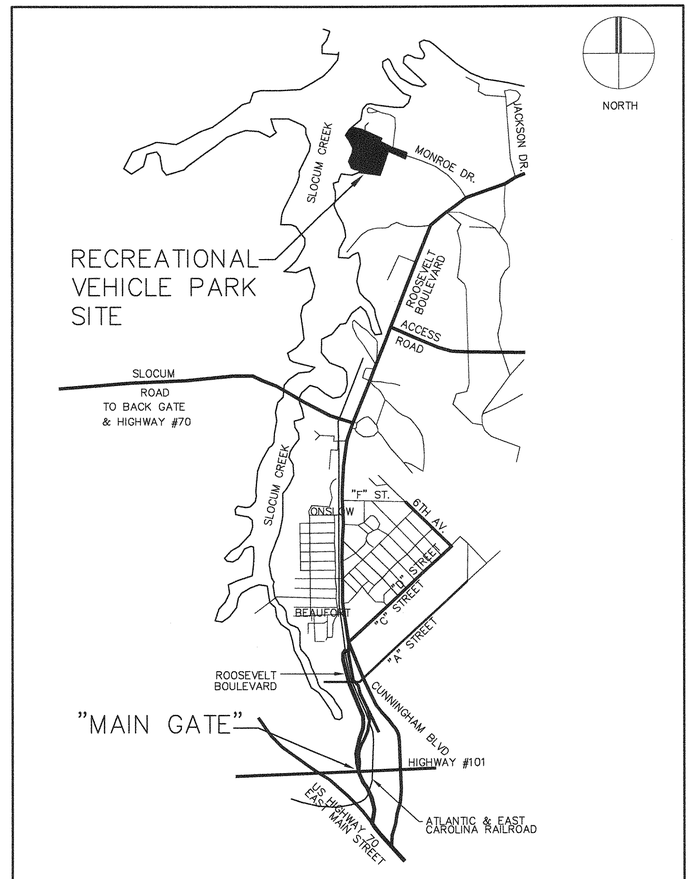

VICINITY MAP

CIVIL SHEET INDEX

C-000C COVER SHEET
C-000 EXISTING SITE PLAN
C-001 EXISTING SITE PLAN
C-002 PROPOSED OVERALL SITE PLAN
CD-110 SITE DEMOLITION PLAN
CD-111 SITE DEMOLITION PLAN
C-110 SITE GEOMETRY PLAN
C-111 SITE GEOMETRY PLAN
C-120 SITE UTILITIES PLAN
C-121 SITE UTILITIES PLAN
C-130 GRADING AND DRAINAGE PLAN
C-131 GRADING AND DRAINAGE PLAN
C-140 PRE-DEVELOPMENT DRAINAGE PLAN
C-150 POST-DEVELOPMENT DRAINAGE PLAN
C-160 EROSION AND SEDIMENT CONTROL PLAN
C-161 EROSION AND SEDIMENT CONTROL PLAN
C-220 SANITARY SEWER PROFILES
C-510 SITE DETAILS
C-511 SITE DETAILS
C-512 DUMP STATION DETAILS
C-520 UTILITY DETAILS
C-521 UTILITY DETAILS
C-530 GRADING AND DRAINAGE DETAILS
C-531 GRADING AND DRAINAGE DETAILS
C-540 EROSION AND SEDIMENT CONTROL DETAILS
C-541 EROSION AND SEDIMENT CONTROL DETAILS
C-542 STORMWATER POLLUTION PREVENTION PLAN
L-110 LANDSCAPE PLAN

HASKELL ARCHITECTS and ENGINEERS, P.A.
NORTH CAROLINA – Architecture # 51202, Engineering # C-2136
HASKELL
The Haskell Company
111 Riverside Avenue
Jacksonville, Florida 32202
Phone # (904) 791-4500

MARINE CORPS AIR STATION CHERRY POINT
RECREATIONAL VEHICLE PARK
CHERRY POINT, NORTH CAROLINA

DATE	ISSUE/REVISION
06/11/12	FINAL CDs
06/04/12	CI
04/09/12	OPT.2_95%
03/29/12	DENR WATER PI
3/26/12	CPI 3
12/2/11	CPI 2
10/19/11	EAD 2
9/8/11	CPI
7/29/11	EAD REVIEW

We hereby expressly reserve the property rights to this drawing and it is not to be reproduced, copied in any format or manner whatsoever without first obtaining our express written permission and consent.

DRAWN BY: TML
CHECKED BY: TML

AE JOB NUMBER
6601490

COVER SHEET

C-000C
SHEET NUMBER

NOTE:

01. COMBINED SCALE FACTOR = .99988755.
02. ELLIPSOID CORRECTION FACTOR = 1.00000518
03. COMBINED SCALE FACTOR = .99989273
04. ONE METER = 3.280833' U.S. SURVEY FEET.
05. FORWARD GRID AZIMUTH = N = 0 DEGREES = 294°05'15"
06. ALL DISTANCES ARE HORIZONTAL GROUND DISTANCES, UNLESS OTHERWISE NOTED.
07. ALL BEARINGS SHOWN ARE REFERENCE NC GRID(NAD83) UNLESS OTHERWISE SHOWN.

C-001
C-000
KEY PLAN

NORTH
SCALE: 1"=30'
0 30 60

HASKELL ARCHITECTS and ENGINEERS, P.A.
NORTH CAROLINA – Architecture # 51202, Engineering # C-2136
HASKELL
The Haskell Company
111 Riverside Avenue
Jacksonville, Florida 32202
Phone # (904) 791-4500

MARINE CORPS AIR STATION CHERRY POINT

RECREATIONAL VEHICLE PARK

CHERRY POINT, NORTH CAROLINA

DATE	ISSUE/REVISION
06/11/12	FINAL CDs
06/04/12	CI
OPT.2_95%	04/09/12
03/29/12	DENR WATER PI
3/26/12	CPI 3
12/2/11	CPI 2
10/19/11	EAD 2
9/8/11	CPI
7/29/11	EAD REVIEW
7/14/11	ODP

We hereby expressly reserve the property rights to this drawing and it is not to be reproduced, copied in any format or manner whatsoever without first obtaining our express written permission and consent.

DRAWN BY: TML
CHECKED BY: TML

AE JOB NUMBER
6601490

EXISTING SITE PLAN

C-000
SHEET NUMBER

L:\CivilPublic\Projects\6601490 Cherry Point RV Park\201 Design\20 AutoCAD\C\66014900-000.dwg Layout Name: C-000 Jun 06, 2012 – 11:12am PLOTTED BY: dbpoor
XREF: 66014900M-00 [L:\CivilPublic\Projects\6601490 Cherry Point RV Park\201 Design\20 AutoCAD\C\66014900M-00.dwg]
XREF: 24X36 LOG0 [L:\CivilPublic\Projects\6601490 Cherry Point RV Park\201 Design\20 AutoCAD\B\24X36 LOG0.dwg]

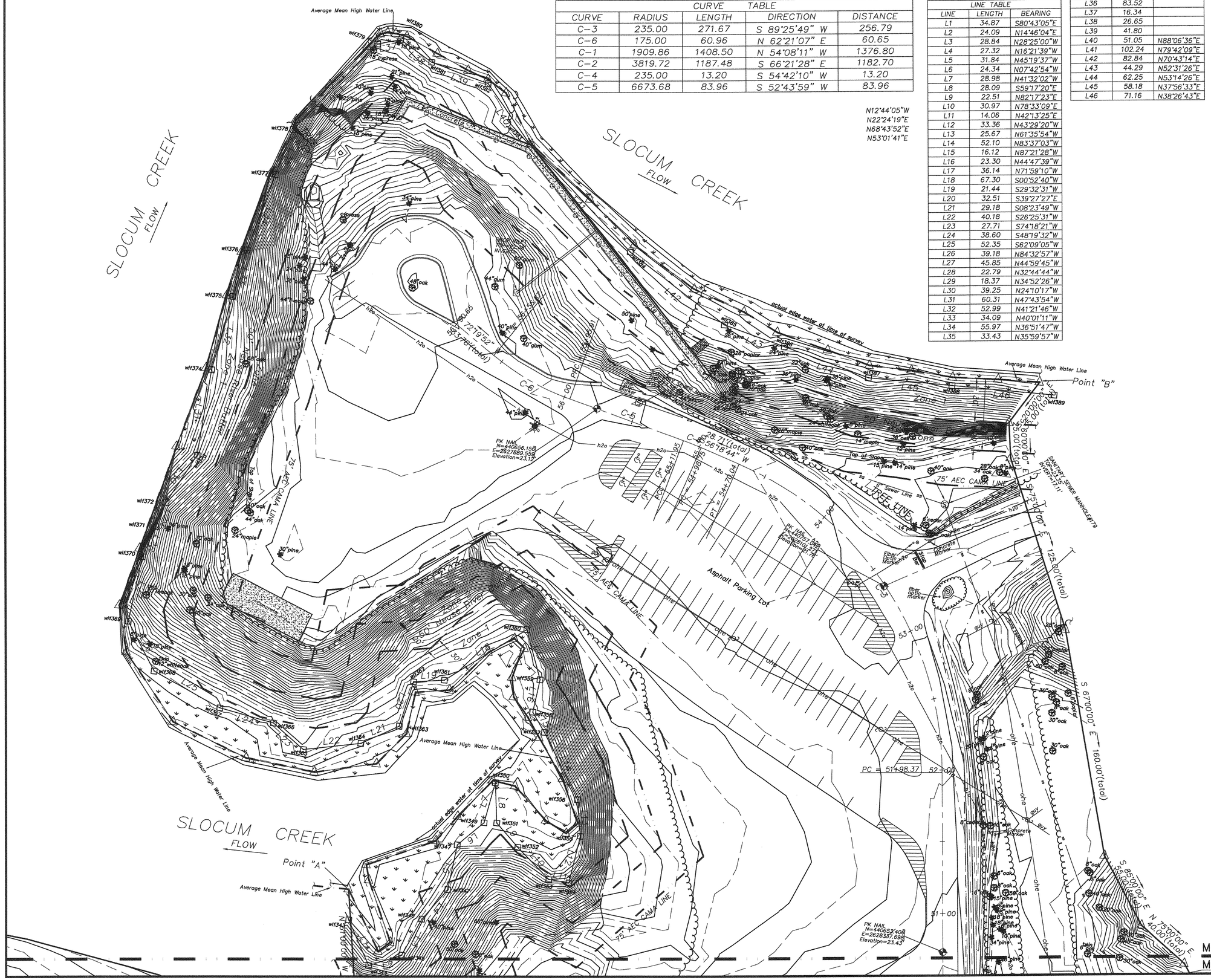

CURVE TABLE				
CURVE	RADIUS	LENGTH	DIRECTION	DISTANCE
C-3	235.00	271.67	S 89°25'49" W	256.79
C-6	175.00	60.96	N 62°21'07" E	60.65
C-1	1909.86	1408.50	N 54°08'11" W	1376.80
C-2	3819.72	1187.48	S 66°21'28" E	1182.70
C-4	235.00	13.20	S 54°42'10" W	13.20
C-5	6673.68	83.96	S 52°43'59" W	83.96

N12°44'05"W
N22°24'19"E
N68°43'52"E
N53°01'41"E

WETLAND LINE TABLE

LINE TABLE		
LINE	LENGTH	BEARING
L1	34.87	S80°43'05"E
L2	24.09	N14°46'04"E
L3	28.84	N28°25'00"W
L4	27.32	N16°21'39"W
L5	31.84	N45°19'37"W
L6	24.34	N07°42'54"W
L7	28.98	N41°32'02"W
L8	28.09	S59°17'20"E
L9	22.51	N82°17'23"E
L10	30.97	N78°33'09"E
L11	14.06	N42°13'25"E
L12	33.36	N43°29'20"W
L13	25.67	N61°35'54"W
L14	52.10	N83°37'03"W
L15	16.12	N87°21'28"W
L16	23.30	N44°47'39"W
L17	36.14	N71°59'10"W
L18	67.30	S00°52'40"W
L19	21.44	S29°32'31"W
L20	32.51	S39°27'27"E
L21	29.18	S08°23'49"W
L22	40.18	S26°25'31"W
L23	27.71	S74°18'21"W
L24	38.60	S48°19'32"W
L25	52.35	S62°09'05"W
L26	39.18	N84°32'57"W
L27	45.85	N44°59'45"W
L28	22.79	N32°44'44"W
L29	18.37	N34°52'26"W
L30	39.25	N24°10'17"W
L31	60.31	N47°43'54"W
L32	52.99	N41°21'46"W
L33	34.09	N40°01'11"W
L34	55.97	N36°51'47"W
L35	33.43	N35°59'57"W
L36	83.52	
L37	16.34	
L38	26.65	
L39	41.80	
L40	51.05	N88°06'36"E
L41	102.24	N79°42'09"E
L42	82.84	N70°43'14"E
L43	44.29	N52°31'26"E
L44	62.25	N53°14'26"E
L45	58.18	N37°56'33"E
L46	71.16	N38°26'43"E

Shoreline A–B

LINE TABLE		
LINE	LENGTH	BEARING
Point "A"	48.01	S82°46'33"E
	10.53	N04°32'52"W
	45.91	N76°14'11"W
	10.91	N66°48'32"W
	50.94	N13°43'23"E
	23.23	N16°38'41"W
	34.85	N12°42'06"W
	15.79	N46°45'02"E
	32.06	N80°51'52"E
	16.77	N65°41'34"E
	10.88	N08°45'19"W
	32.70	N76°01'54"W
	32.77	N87°19'06"W
	16.09	N86°26'47"W
	17.33	S87°58'56"W
	13.60	N61°58'27"W
	11.95	N37°53'44"W
	10.33	N30°36'05"W
	9.77	S76°54'44"W
	20.36	S04°31'19"W
	37.86	S11°46'34"E
	23.72	S28°54'50"W
	29.53	S45°12'19"E
	29.55	S12°32'17"E
	43.53	S25°01'04"W
	48.33	S44°09'18"W
	56.53	S59°03'46"W
	58.65	S89°10'25"W
	32.86	N66°01'45"W
	41.76	N37°34'51"W
	75.59	N37°34'52"W
	58.14	N36°43'46"W
	52.66	N41°17'03"W
	32.18	N38°46'14"W
	57.87	N36°56'06"W
	41.52	N32°01'04"W
	33.32	N13°22'04"W
	37.32	N12°43'51"W
	7.83'	N15°51'27"W
	5.12	N06°30'47"W
	4.86	N25°14'13"E
	5.76	N38°28'10"E
	7.85	N47°00'00"E
	24.45	N62°04'13"E
	24.22	N61°05'36"E
	15.08	N56°22'07"E
	15.71	N70°01'10"E
	39.90	S84°00'34"E
	55.63	N76°03'30"E
	44.19	N78°22'48"E
	51.65	N69°23'51"E
	37.98	N57°28'16"E
	27.24	N64°25'08"E
	37.01	N52°04'41"E
	30.95	N53°10'49"E
	29.29	N39°20'05"E
	29.05	N42°13'32"E
	31.59	N35°40'43"E
Point "B"	28.80	N36°49'26"E

HASKELL ARCHITECTS and ENGINEERS, P.A.
NORTH CAROLINA - Architecture # 51202, Engineering # C-2136
HASKELL
The Haskell Company
111 Riverside Avenue
Jacksonville, Florida 32202
Phone # (904) 791-4500

MARINE CORPS AIR STATION CHERRY POINT

RECREATIONAL VEHICLE PARK

CHERRY POINT, NORTH CAROLINA

DATE	ISSUE/REVISION
06/11/12	FINAL CDs
06/04/12	CI
04/09/12	OPT.2_95%
03/29/12	DENR WATER PI
3/26/12	CPI 3
12/2/11	CPI 2
10/19/11	EAD 2
9/8/11	CPI
7/29/11	EAD REVIEW
7/14/11	QDP

We hereby expressly reserve the property rights to this drawing and it is not to be reproduced, copied in any format or manner whatsoever without first obtaining our express written permission and consent.

DRAWN BY: TML
CHECKED BY: TML

AE JOB NUMBER
6601490

EXISTING SITE PLAN

C-001
SHEET NUMBER

C-001
C-000
KEY PLAN

NORTH
SCALE: 1"=30'
0 30 60

XREF: 24X36 LOGO [L:\CivilPublic\Projects\6601490 Cherry Point RV Park\201 Design\20 AutoCAD\B\24X36 LOGO.dwg]
XREF: 6601490CM-00 [L:\CivilPublic\Projects\6601490 Cherry Point RV Park\201 Design\20 AutoCAD\C\6601490CM-00.dwg]
L:\CivilPublic\Projects\6601490 Cherry Point RV Park\201 Design\20 AutoCAD\C\6601490C-001.dwg Layout Name: C-001 Jun 06, 2012 - 11:12am PLOTTED BY: jocdap

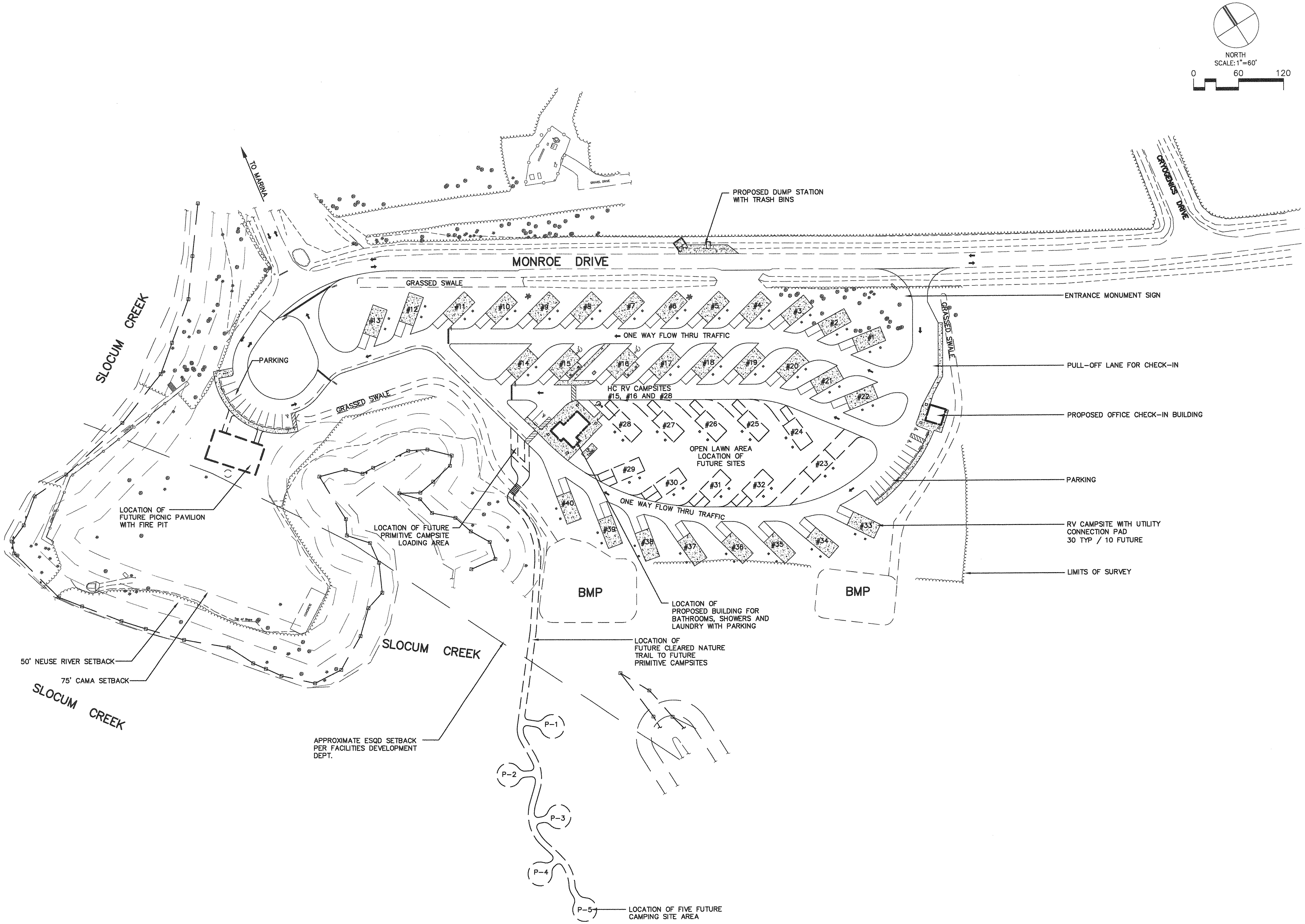

XREF: 24X36 LOGO [L:\CivilPublic\Projects\6601490 Cherry Point RV Park\201 Design\20 AutoCAD\B\24X36 LOGO.dwg]
XREF: 6601490CM-11 [L:\CivilPublic\Projects\6601490 Cherry Point RV Park\201 Design\20 AutoCAD\C\6601490CM-11.dwg]
XREF: 6601490CM-21A [L:\CivilPublic\Projects\6601490 Cherry Point RV Park\201 Design\20 AutoCAD\C\6601490CM-21A.dwg]
XREF: 6601490CM-10 [L:\CivilPublic\Projects\6601490 Cherry Point RV Park\201 Design\20 AutoCAD\C\6601490CM-10.dwg]

L:\CivilPublic\Projects\6601490 Cherry Point RV Park\201 Design\20 AutoCAD\C\6601490C-002.dwg Layout Name: C-002 Jun 06, 2012 - 11:13am PLOTTED BY: dspoor

MYRA W. JONES, P.E.
CIVIL ENGINEER
REG. NO. 031309

HASKELL ARCHITECTS and ENGINEERS, P.A.
NORTH CAROLINA – Architecture # 51202, Engineering # C-2136

HASKELL

The Haskell Company
111 Riverside Avenue
Jacksonville, Florida 32202
Phone # (904) 791-4500

MARINE CORPS AIR STATION CHERRY POINT

RECREATIONAL VEHICLE PARK

CHERRY POINT, NORTH CAROLINA

DATE	ISSUE/REVISION
06/11/12	FINAL CDs
06/04/12	CI
04/09/12	OPT.2_95%
03/29/12	DENR WATER PI
3/26/12	CPI 3
12/2/11	CPI 2
10/19/11	EAD 2
9/8/11	CPI
7/29/11	EAD REVIEW
7/14/11	QDP

We hereby expressly reserve the property rights to this drawing and it is not to be reproduced, copied in any format or manner whatsoever without first obtaining our express written permission and consent.

DRAWN BY: TML
CHECKED BY: TML

AE JOB NUMBER
6601490

PROPOSED OVERALL SITE PLAN

C-002
SHEET NUMBER

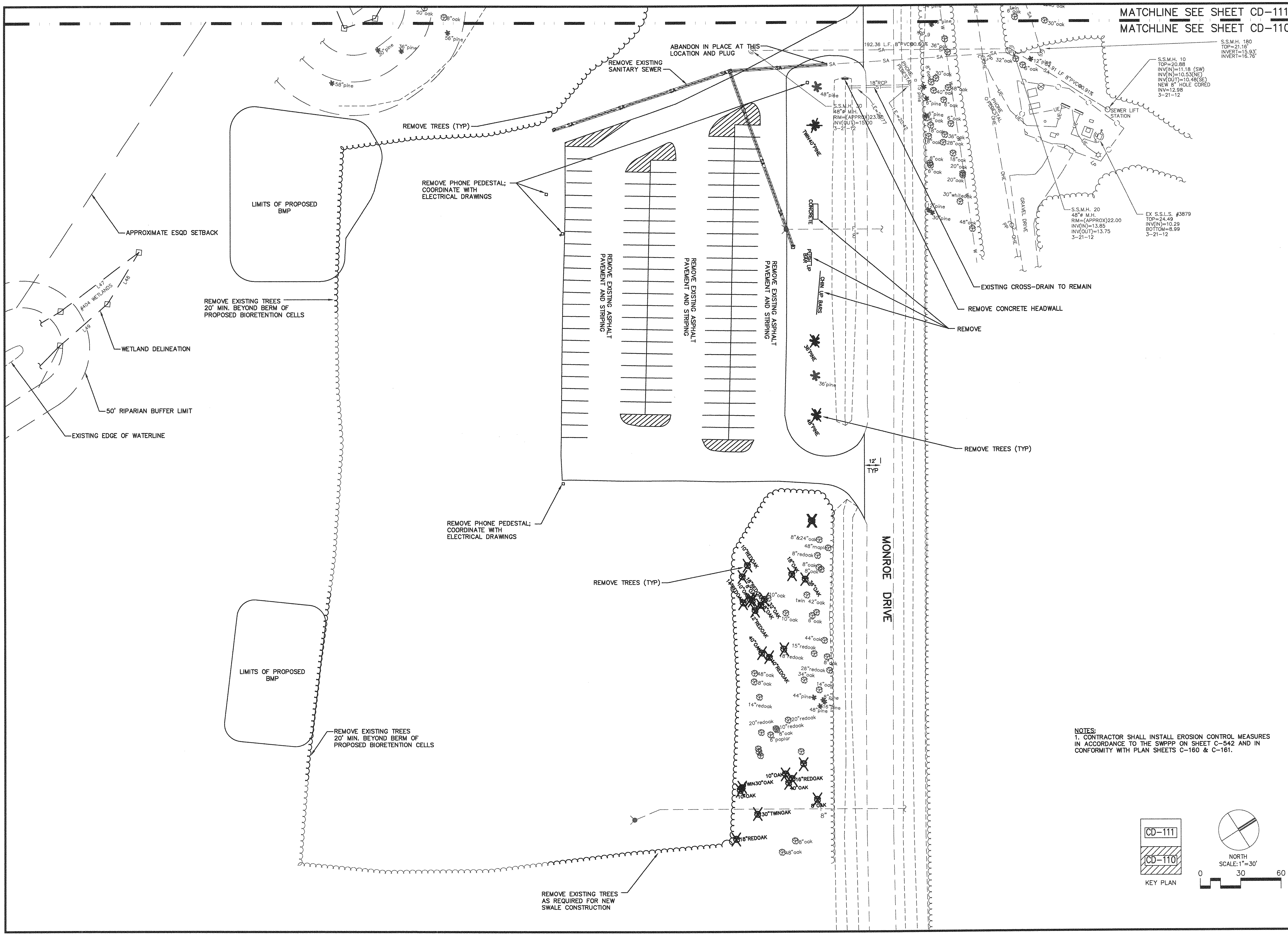

XREF: 24X36 LOGO [L:\CivilPublic\Projects\6601490 Cherry Point RV Park\201 Design\20 AutoCAD\B\24X36 LOGO.dwg]
XREF: 6601490CM-61 [L:\CivilPublic\Projects\6601490 Cherry Point RV Park\201 Design\20 AutoCAD\C\6601490CM-61.dwg]
XREF: 6601490CM-10 [L:\CivilPublic\Projects\6601490 Cherry Point RV Park\201 Design\20 AutoCAD\C\6601490CM-10.dwg]
XREF: 6601490CM-31 [L:\CivilPublic\Projects\6601490 Cherry Point RV Park\201 Design\20 AutoCAD\C\6601490CM-31.dwg]
XREF: 6601490CM-41 [L:\CivilPublic\Projects\6601490 Cherry Point RV Park\201 Design\20 AutoCAD\C\6601490CM-41.dwg]

L:\CivilPublic\Projects\6601490 Cherry Point RV Park\201 Design\20 AutoCAD\C\6601490CD-110.dwg Layout Name: CD-110 Jun 06, 2012 - 11:17am PLOTTED BY: dbpoor

HASKELL ARCHITECTS and ENGINEERS, P.A.
NORTH CAROLINA - Architecture # 51202, Engineering # C-2136
HASKELL
The Haskell Company
111 Riverside Avenue
Jacksonville, Florida 32202
Phone # (904) 791-4500

MARINE CORPS AIR STATION CHERRY POINT

RECREATIONAL VEHICLE PARK

CHERRY POINT, NORTH CAROLINA

DATE	ISSUE/REVISION
06/11/12	FINAL CDs
06/04/12	CI
04/09/12	OPT.2_95%
03/29/12	DENR WATER PI
3/26/12	CPI 3
12/2/11	CPI 2
10/19/11	EAD 2
9/8/11	CPI
8/29/11	RPI
7/29/11	EAD REVIEW
7/14/11	QDP
7/1/11	PR

We hereby expressly reserve the property rights to this drawing and it is not to be reproduced, copied in any format or manner whatsoever without first obtaining our express written permission and consent.

DRAWN BY:	CHECKED BY:
TML	TML

AE JOB NUMBER
6601490

SITE DEMOLITION PLAN

CD-110
SHEET NUMBER

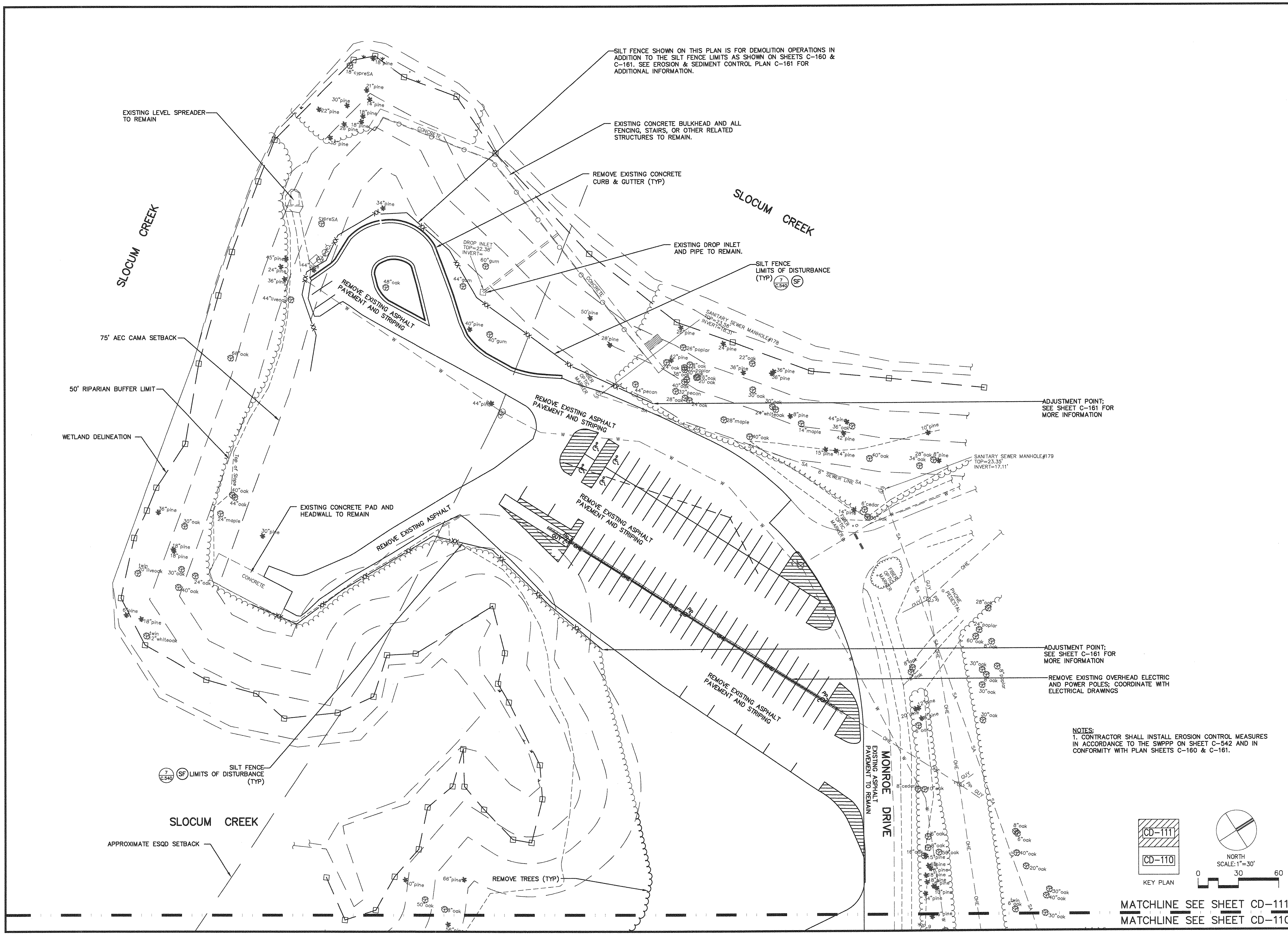

NOTES:
1. CONTRACTOR SHALL INSTALL EROSION CONTROL MEASURES IN ACCORDANCE TO THE SWPPP ON SHEET C-542 AND IN CONFORMITY WITH PLAN SHEETS C-160 & C-161.

MATCHLINE SEE SHEET CD-111

MATCHLINE SEE SHEET CD-110

HASKELL ARCHITECTS and ENGINEERS, P.A.
NORTH CAROLINA – Architecture # 51202, Engineering # C-2136
HASKELL
The Haskell Company
111 Riverside Avenue
Jacksonville, Florida 32202
Phone # (904) 791-4500
MYRA W. JONES, P.E.

MARINE CORPS AIR STATION CHERRY POINT

RECREATIONAL VEHICLE PARK

CHERRY POINT, NORTH CAROLINA

DATE	ISSUE/REVISION
06/11/12	FINAL CDs
06/04/12	CI
04/09/12	OPT.2_95%
03/29/12	DENR WATER PI
3/26/12	CPI 3
12/2/11	CPI 2
10/19/11	EAD 2
9/8/11	CPI
8/29/11	RPI
7/29/11	EAD REVIEW
7/14/11	ODP
7/1/11	PR

We hereby expressly reserve the property rights to this drawing and it is not to be reproduced, copied in any format or manner whatsoever without first obtaining our express written permission and consent.

DRAWN BY: TML CHECKED BY: TML

AE JOB NUMBER 6601490

SITE DEMOLITION PLAN

CD-111
SHEET NUMBER

L:\CivilPublic\Projects\6601490 Cherry Point RV Park\201 Design\20 AutoCAD\C\6601490CD-111.dwg Layout Name: CD-111 Jun 06, 2012 – 11:18am PLOTTED BY: dpoor

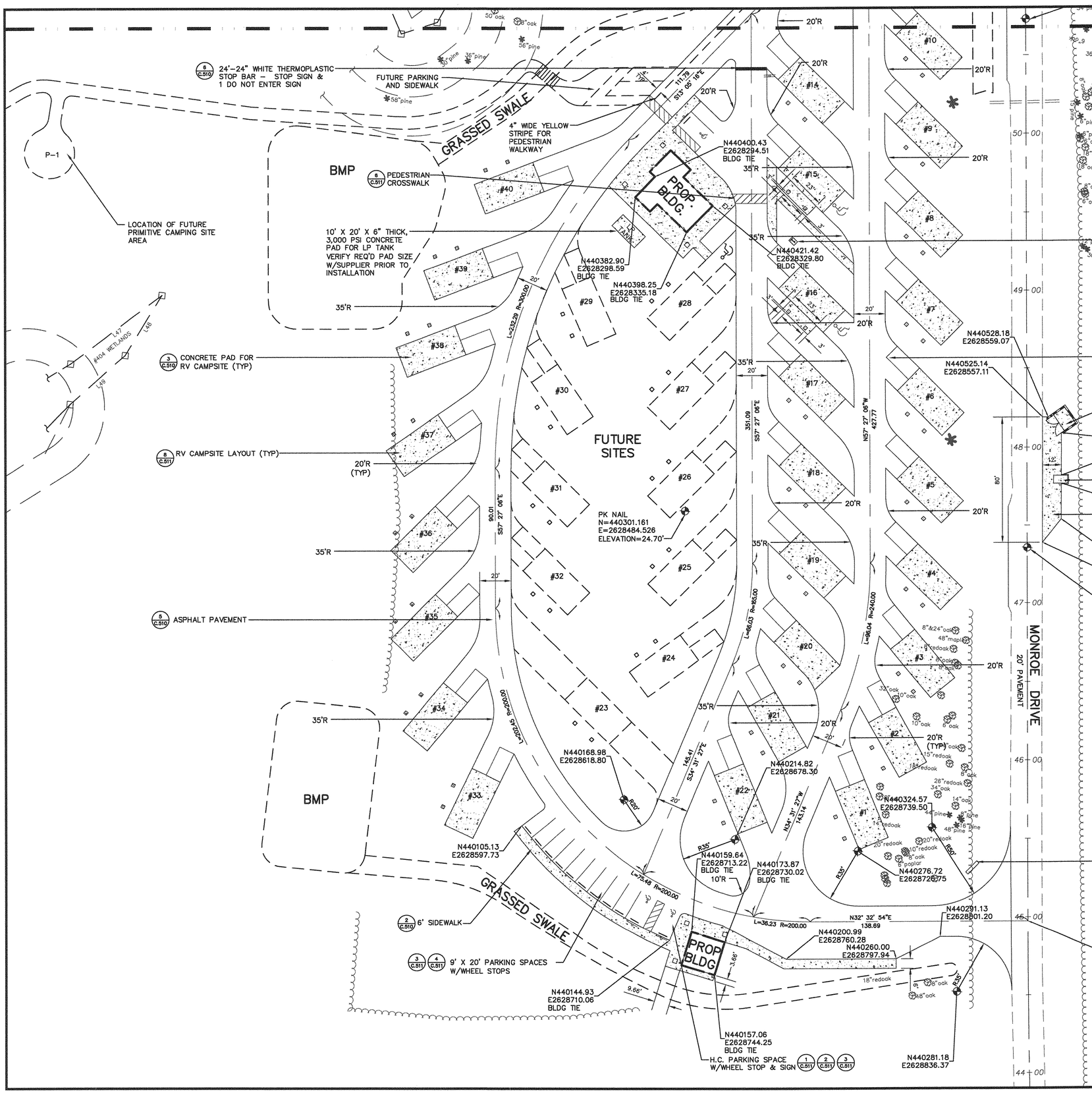

GENERAL NOTES:
1. FOR ADDITIONAL INFORMATION FOR FILL PLACEMENT SEE DETAIL 1 SHEET C-510.
2. BUILDING TIES FOR BUILDING CORNER STAKE-OUT ARE TO THE OUTSIDE FINISHED FACE OF WALL.
3. SEE ARCHITECTURAL PLANS FOR ALL BUILDING DIMENSIONS.
4. ALL RADII ARE 3 FOOT RADII UNLESS OTHERWISE NOTED.
5. SEE ELECTRICAL AND MECHANICAL DRAWINGS FOR FINAL LAYOUT OF ALL ELECTRICAL AND MECHANICAL PADS.
6. SEE SITE DETAILS FOR ADDITIONAL INFORMATION.
7. SHOP DRAWINGS WILL BE REQUIRED FOR THIS PROJECT.
8. ALL DRIVEWAYS ARE 20 FOOT WIDE UNLESS OTHERWISE NOTED.
9. NUMBERING INDICATED ON RV CAMPSITES ARE NOT TO BE CONSIDERED FINAL. COORDINATE WITH MCCS FOR DESIRED FINAL NUMBERING.

C-111
C-110
KEY PLAN

NORTH
SCALE: 1"=30'
0 30 60

HASKELL ARCHITECTS and ENGINEERS, P.A.
NORTH CAROLINA – Architecture # 51202, Engineering # C-2136
HASKELL
The Haskell Company
111 Riverside Avenue
Jacksonville, Florida 32202
Phone # (904) 791-4500

MARINE CORPS AIR STATION CHERRY POINT
RECREATIONAL VEHICLE PARK
CHERRY POINT, NORTH CAROLINA

DATE	ISSUE/REVISION
06/11/12	FINAL CDs
06/04/12	CI
04/09/12	OPT.2_95%
3/26/12	CPI 3
12/2/11	CPI 2
10/19/11	EAD 2
9/8/11	CPI
8/29/11	RPI
7/29/11	EAD REVIEW
7/14/11	QDP
7/1/11	PR

We hereby expressly reserve the property rights to this drawing and it is not to be reproduced, copied in any format or manner whatsoever without first obtaining our express written permission and consent.

DRAWN BY: TML
CHECKED BY: TML
AE JOB NUMBER 6601490

SITE GEOMETRY PLAN

C-110
SHEET NUMBER

L:\Civil\Public\Projects\6601490 Cherry Point RV Park\201 Design\20 AutoCAD\C\6601490C-110.dwg Layout Name: C-110 Jun 06, 2012 - 11:13am PLOTTED BY: dpoor
XREF: 24X36 LOGO [L:\Civil\Public\Projects\6601490 Cherry Point RV Park\201 Design\20 AutoCAD\B\24X36 LOGO.dwg]
XREF: 6601490CM-21 [L:\Civil\Public\Projects\6601490 Cherry Point RV Park\201 Design\20 AutoCAD\C\6601490CM-21.dwg]
XREF: 6601490CM-10 [L:\Civil\Public\Projects\6601490 Cherry Point RV Park\201 Design\20 AutoCAD\C\6601490CM-10.dwg]
XREF: 6601490CM-11 [L:\Civil\Public\Projects\6601490 Cherry Point RV Park\201 Design\20 AutoCAD\C\6601490CM-11.dwg]

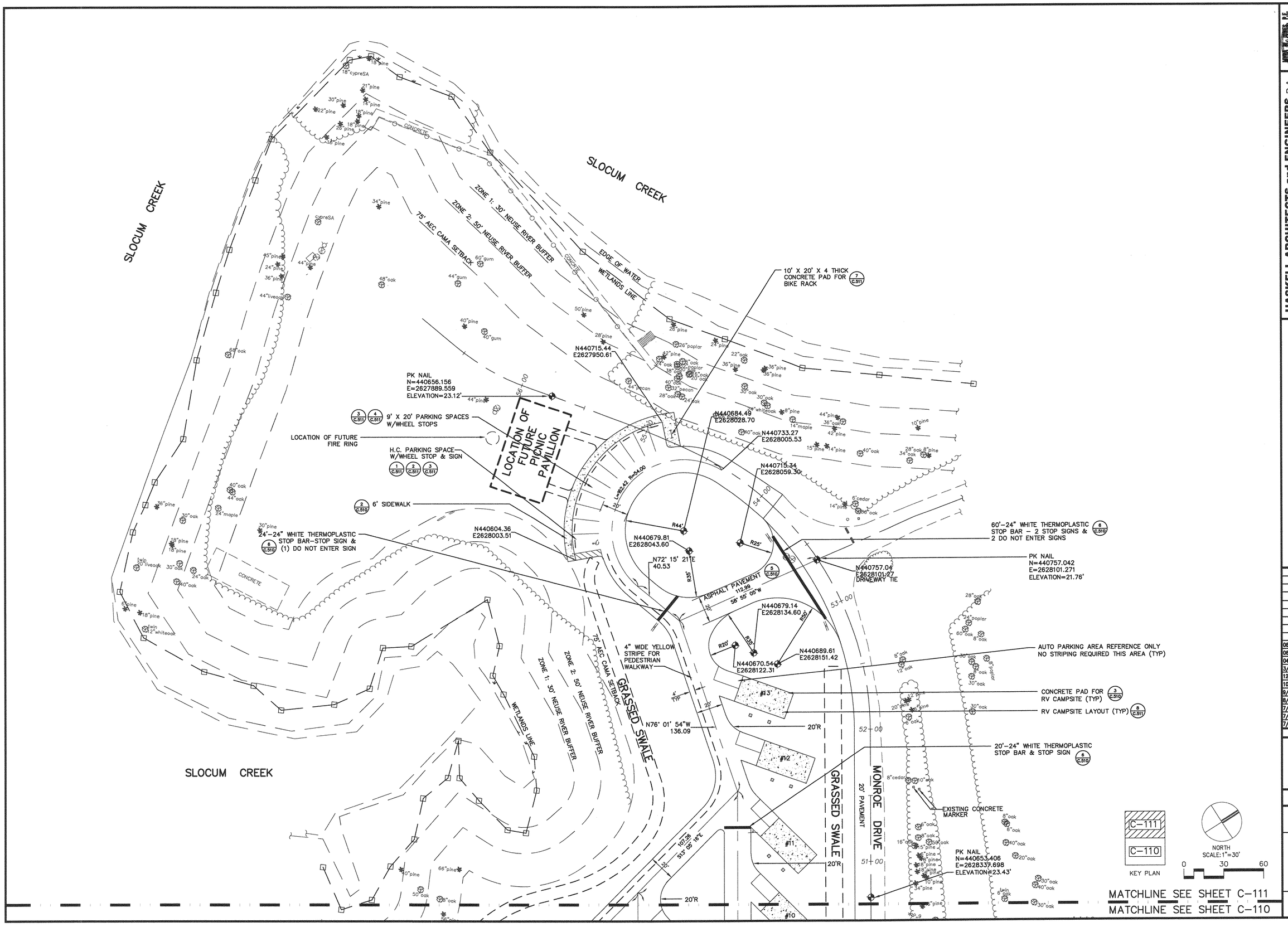

HASKELL ARCHITECTS and ENGINEERS, P.A.
NORTH CAROLINA - Architecture # 51202, Engineering # C-2136

HASKELL
The Haskell Company
111 Riverside Avenue
Jacksonville, Florida 32202
Phone # (904) 791-4500

JOHN T. WHITE, P.E.
REG. NO. 031309

MARINE CORPS AIR STATION CHERRY POINT

RECREATIONAL VEHICLE PARK

CHERRY POINT, NORTH CAROLINA

DATE	ISSUE/REVISION
06/11/12	FINAL CDs
06/04/12	CI
04/09/12	OPT.2_95%
3/28/12	CPI 3
12/2/11	CPI 2
10/19/11	EAD 2
9/8/11	CPI
8/28/11	RPI
7/28/11	EAD REVIEW
7/14/11	QDP
7/1/11	PR

We hereby expressly reserve the property rights to this drawing and it is not to be reproduced, copied in any format or manner whatsoever without first obtaining our express written permission and consent.

DRAWN BY: TML
CHECKED BY: TML

AE JOB NUMBER
6601490

SITE GEOMETRY PLAN

C-111
SHEET NUMBER

XREF: 24X36 LOGO [L:\CivilPublic\Projects\6601490 Cherry Point RV Park\201 Design\20 AutoCAD\B\24X36 LOGO.dwg]
XREF: 6601490CM-21 [L:\CivilPublic\Projects\6601490 Cherry Point RV Park\201 Design\20 AutoCAD\C\6601490CM-21.dwg]
XREF: 6601490CM-10 [L:\CivilPublic\Projects\6601490 Cherry Point RV Park\201 Design\20 AutoCAD\C\6601490CM-10.dwg]
XREF: 6601490CM-11 [L:\CivilPublic\Projects\6601490 Cherry Point RV Park\201 Design\20 AutoCAD\C\6601490CM-11.dwg]
XREF: TML-AutoTurn [L:\CivilPublic\Projects\6601490 Cherry Point RV Park\201 Design\20 AutoCAD\C\W\TML-AutoTurn.dwg]
L:\CivilPublic\Projects\6601490 Cherry Point RV Park\201 Design\20 AutoCAD\C\6601490C-111.dwg Layout Name: C-111 Jun 06, 2012 - 11:13am PLOTTED BY: dpoor

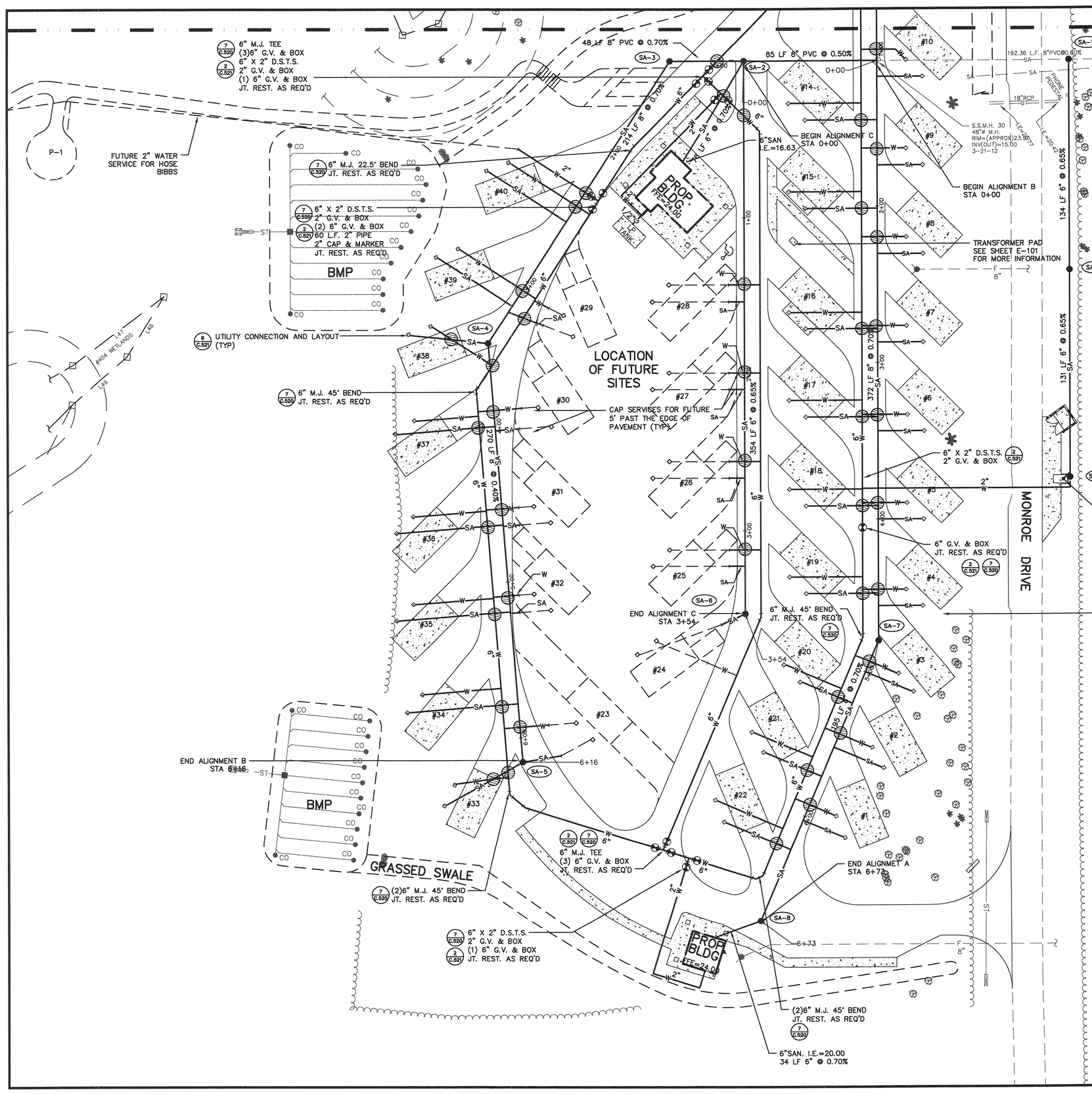

SANITARY STRUCTURE TABLE								
(S-#)	DESCRIPTION OR TYPE	TOP. EL.	INVERTS N	INVERTS S	INVERTS E	INVERTS W	DETAIL	
SA-1	48"ø MANHOLE	22.12	16.40	16.40	16.40		4 / 521	
SA-2	48"ø MANHOLE	22.20	16.10	16.10	16.10		4 / 521	16.10(SE)
SA-3	48"ø MANHOLE	21.25	16.35		16.35		4 / 521	
SA-4	48"ø MANHOLE	23.75	17.85	17.85	17.85		4 / 521	
SA-5	48"ø MANHOLE	22.80	19.00	19.00		19.00	4 / 521	
SA-6	48"ø MANHOLE	24.38		18.60		18.60	4 / 521	
SA-7	48"ø MANHOLE	25.25	18.25	18.25			4 / 521	
SA-8	48"ø MANHOLE	24.17	19.62	19.62			4 / 521	
SA-9	S.S.C.O.	22.00			15.87		6 / 520	
SA-10	S.S.C.O.	22.00			16.72		6 / 520	
SA-11	48"ø MANHOLE	23.00	15.00	15.00	MATCH	MATCH	4 / 521	**

** CONTRACTOR'S OPTION TO USE DOGHOUSE MANHOLE – MATCH EXISTING INVERTS – 14.33± VERIFY EXISTING INVERTS PRIOR TO CONSTRUCTION & NOTIFY E.O.R.. OF ANY CONFLICTS

INDICATES WATER/SEWER CONFLICT OR CROSSING
INDICATES WATER/STORM CONFLICT OR CROSSING
INDICATES SEWER/STORM CONFLICT OR CROSSING

GENERAL NOTES:

1. ALL GRAVITY FLOW SANITARY SEWER PIPE TO BE SDR 35 PVC PIPE FOR DEPTHS LESS THAN 10 FEET AND D.I.P (A.S.T.M. A746) FOR DEPTHS EXCEEDING 10 FEET.
2. ALL SITE FIRE PIPING SHALL BE D.I.P. AWWA C151 THICKNESS CLASS 52, PRESSURE RATED CLASS 350 P.S.I. PIPE.
3. ALL D.I.P. WATER MAIN PIPE 4" AND LARGER TO BE AWWA C151 THICKNESS CLASS 50, PRESSURE RATED CLASS 350 P.S.I. PIPE
4. ALL P.V.C. WATER MAIN PIPE 4" AND LARGER TO BE DR-18 PVC PRESSURE RATED CLASS 150 C-900 PIPE WITH D.I.P. M.J. FITTINGS.
5. ALL P.V.C. WATER PIPE SMALLER THAN 4" TO BE ASTM D 1785, SCHEDULE 40 FOR 160 P.S.I.G.
6. ALL MECHANICAL JOINT FITTING FOR WATER MAIN SHALL BE PRESSURE RATED AT 250 P.S.I.
7. ALL MECHANICAL JOINT FITTING FOR FIRE MAIN SHALL BE PRESSURE RATED AT 350 P.S.I.
8. SEE WATER AND SEWER DETAIL SHEETS FOR ADDITIONAL INFORMATION.
9. UTILITY CROSSINGS AND CONFLICTS ARE SHOWN ON PLAN SHEETS AND SHALL BE CONSTRUCTED PER DETAILS 1, 2, 3, AND 4 SHEET C-520. ANY VARIANCE FROM THESE DETAILS MUST BE APPROVED BY THE ENGINEER OF RECORD. WHICH DETAIL TO USE IS A CONTRACTORS OPTION. AS-BUILT INFORMATION OF EACH CROSSING MUST BE SUPPLIED.
10. FOR SUMMARY OF TRENCH BACKFILL AND PLACEMENT SEE DETAIL 5 SHEET C-520.
11. SEE ELECTRICAL AND MECHANICAL SITE PLAN FOR FINAL LOCATION OF ALL ELECTRICAL AND MECHANICAL PADS, PULL-BOXES, TRANSFORMERS AND LIGHT POLES.
12. ALL PRESSURE PIPE FITTINGS TO BE MECHANICAL JOINT DUCTILE IRON PIPE (C-900) FITTINGS WITH JOINT RESTRAINERS PER DETAIL 7 SHEET C-520.
13. AS-BUILT INFORMATION WILL BE REQUIRED AT THE END OF THE PROJECT TO INCLUDE ALL PIPE SIZES AND PIPE FITTINGS, LOCATIONS AND ELEVATIONS. PROVIDE THE SURVEY ON AN AS-BUILT VERSION OF CIVIL CADD DRAWINGS FROM THE UNDERGROUND UTILITY CONTRACTOR.
14. DO NOT INTERRUPT SERVICE TO FACILITIES OCCUPIED BY THE OWNER OR OTHERS UNLESS PERMITTED.
15. SHOP DRAWINGS WILL BE REQUIRED FOR THIS PROJECT.
16. MINIMUM DEPTH OF BURY FOR ALL UTILITY PIPES SHALL BE 42".

HASKELL ARCHITECTS and ENGINEERS, P.A.
NORTH CAROLINA – Architecture # 51202, Engineering # C-2136
HASKELL
The Haskell Company
111 Riverside Avenue
Jacksonville, Florida 32202
Phone # (904) 791-4500

MARINE CORPS AIR STATION CHERRY POINT

RECREATIONAL VEHICLE PARK

CHERRY POINT, NORTH CAROLINA

DATE	ISSUE/REVISION
06/11/12	FINAL CDs
06/04/12	CI
04/09/12	OPT.2_95%
03/29/12	DENR WATER PI
3/26/12	CPI 3
12/2/11	CPI 2
10/19/11	EAD 2
9/8/11	CPI
8/29/11	RPI
7/29/11	EAD REVIEW
7/14/11	QDP
7/1/11	PR

We hereby expressly reserve the property rights to this drawing and it is not to be reproduced, copied in any format or manner whatsoever without first obtaining our express written permission and consent.

DRAWN BY: TML | CHECKED BY: TML

AE JOB NUMBER
6601490

SITE UTILITIES PLAN

C-120
SHEET NUMBER

L:\Civil\Public\Projects\6601490 Cherry Point RV Park\201 Design\20 AutoCAD\C\6601490C-120.dwg Layout Name: C-120 Jun 06, 2012 - 11:13am PLOTTED BY: dqdqor
XREF: 24X36 LOGO [L:\Civil\Public\Projects\6601490 Cherry Point RV Park\201 Design\20 AutoCAD\B\24X36 LOGO.dwg]
XREF: 6601490CM-41 [L:\Civil\Public\Projects\6601490 Cherry Point RV Park\201 Design\20 AutoCAD\C\6601490CM-41.dwg]
XREF: 6601490CM-10 [L:\Civil\Public\Projects\6601490 Cherry Point RV Park\201 Design\20 AutoCAD\C\6601490CM-10.dwg]
XREF: 6601490CM-11 [L:\Civil\Public\Projects\6601490 Cherry Point RV Park\201 Design\20 AutoCAD\C\6601490CM-11.dwg]
XREF: 6601490CM-31 [L:\Civil\Public\Projects\6601490 Cherry Point RV Park\201 Design\20 AutoCAD\C\6601490CM-31.dwg]

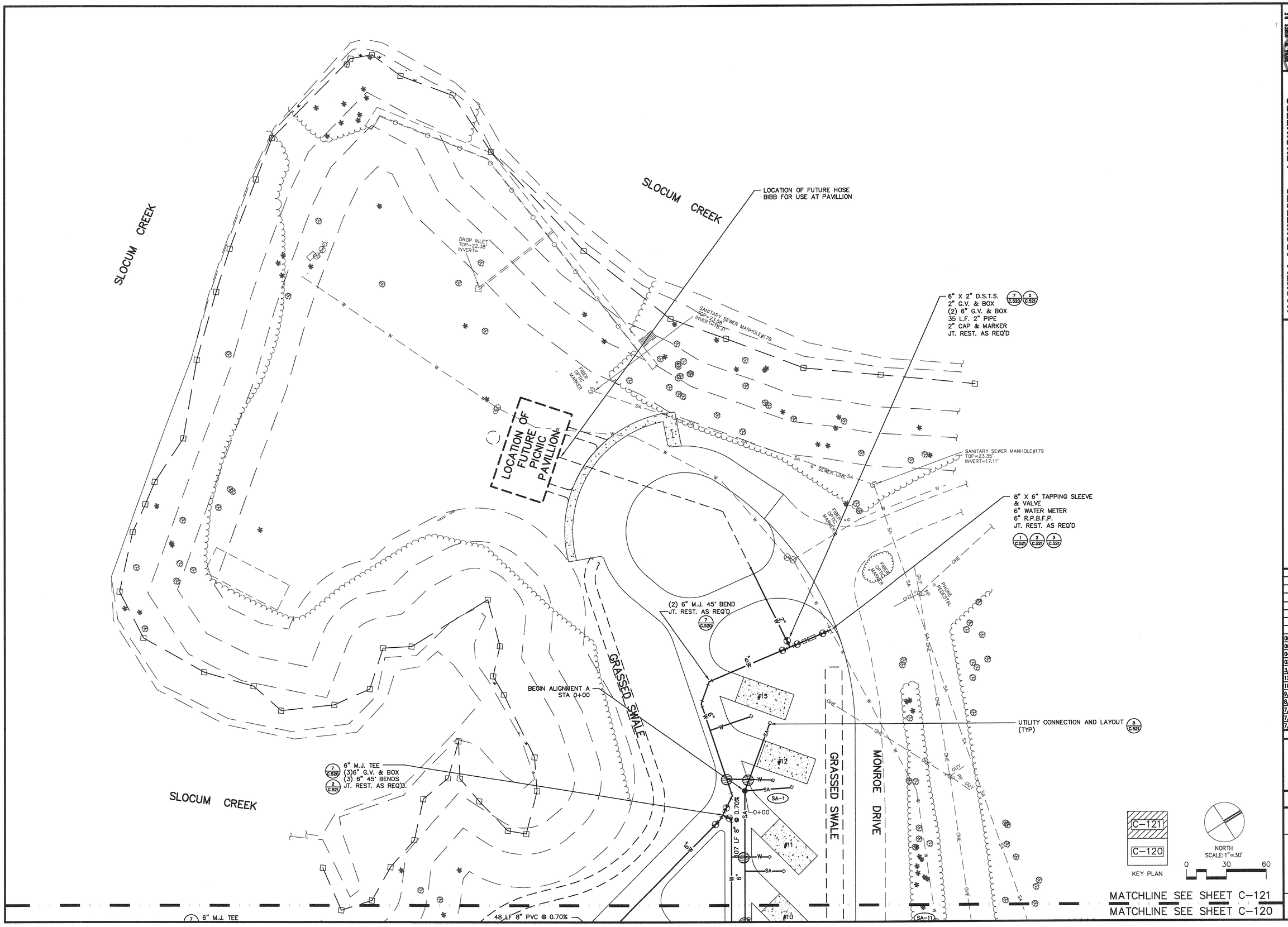

HASKELL ARCHITECTS and ENGINEERS, P.A.
NORTH CAROLINA – Architecture # 51202, Engineering # C-2136

HASKELL
The Haskell Company
111 Riverside Avenue
Jacksonville, Florida 32202
Phone # (904) 791-4500

MICHAEL L. JONES, P.E.
REGISTERED PROFESSIONAL ENGINEER
REG. NO. 031309

MARINE CORPS AIR STATION CHERRY POINT

RECREATIONAL VEHICLE PARK

CHERRY POINT, NORTH CAROLINA

DATE	ISSUE/REVISION
06/11/12	FINAL CDs
06/04/12	CI
04/09/12	OPT.2_95%
03/29/12	DENR WATER PI
3/26/12	CPI 3
12/2/11	CPI 2
10/19/11	EAD 2
9/8/11	CPI
9/29/11	RPI
7/29/11	EAD REVIEW
7/14/11	QDP
7/1/11	PR

We hereby expressly reserve the property rights to this drawing and it is not to be reproduced, copied in any format or manner whatsoever without first obtaining our express written permission and consent.

DRAWN BY: TML
CHECKED BY: TML

AE JOB NUMBER
6601490

SITE UTILITIES PLAN

C-121
SHEET NUMBER

L:\Civil\Public\Projects\6601490 Cherry Point RV Park\201 Design\20 AutoCAD\C\6601490C-121.dwg Layout Name: C-121 Jun 06, 2012 – 11:14am PLOTTED BY: dbpoor
XREF: 24X36 LOGO [L:\Civil\Public\Projects\6601490 Cherry Point RV Park\201 Design\20 AutoCAD\B\24X36 LOGO.dwg]
XREF: 6601490C-10 [L:\Civil\Public\Projects\6601490 Cherry Point RV Park\201 Design\20 AutoCAD\C\6601490C-10.dwg]
XREF: 6601490C-11 [L:\Civil\Public\Projects\6601490 Cherry Point RV Park\201 Design\20 AutoCAD\C\6601490C-11.dwg]
XREF: 6601490C-31 [L:\Civil\Public\Projects\6601490 Cherry Point RV Park\201 Design\20 AutoCAD\C\6601490C-31.dwg]

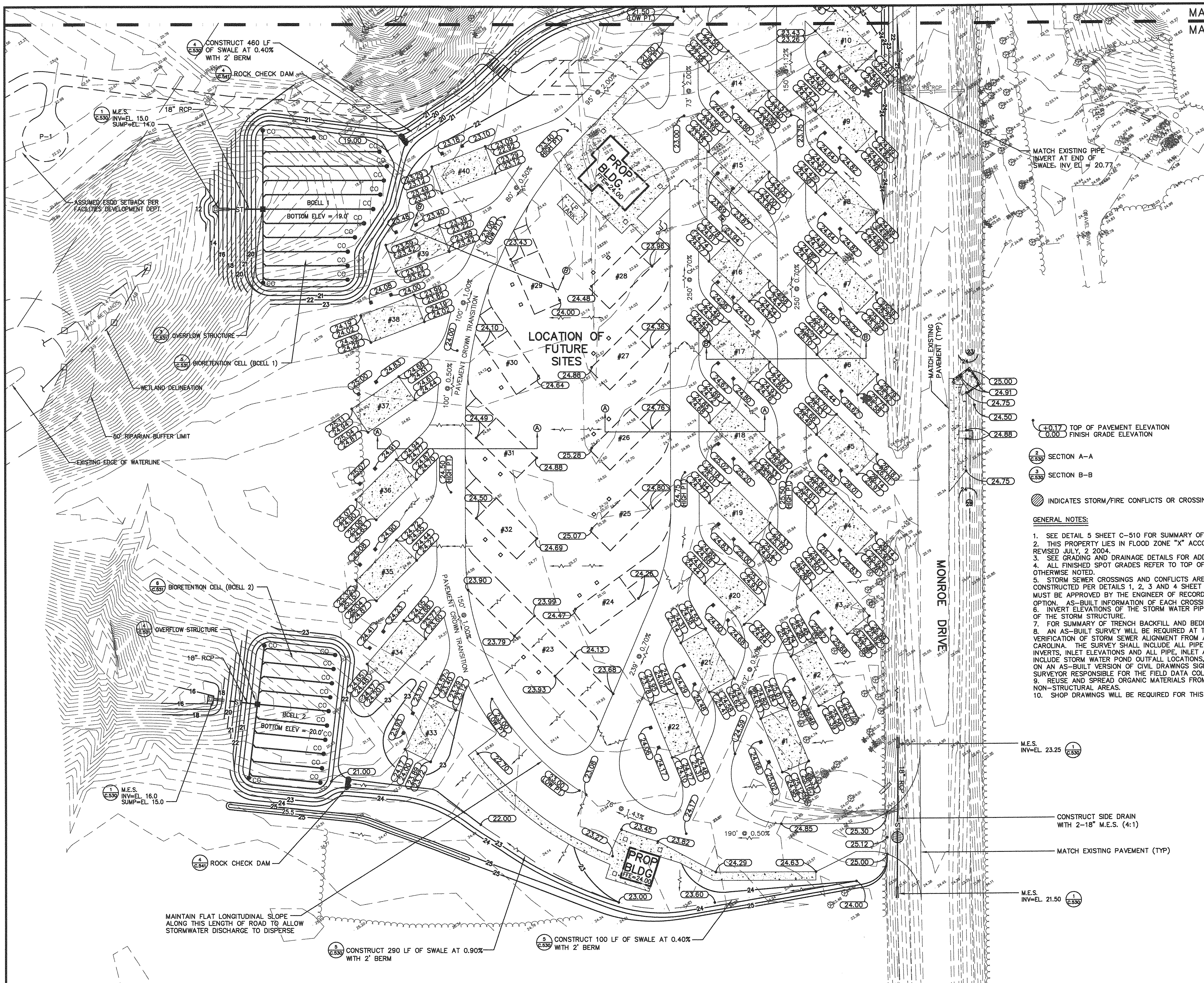

+0.17 TOP OF PAVEMENT ELEVATION
0.00 FINISH GRADE ELEVATION

2/C.530 SECTION A-A

3/C.530 SECTION B-B

INDICATES STORM/FIRE CONFLICTS OR CROSSINGS

GENERAL NOTES:

1. SEE DETAIL 5 SHEET C-510 FOR SUMMARY OF FILL PLACEMENT.
2. THIS PROPERTY LIES IN FLOOD ZONE "X" ACCORDING TO FLOOD MAP 3720643200J, REVISED JULY, 2 2004.
3. SEE GRADING AND DRAINAGE DETAILS FOR ADDITIONAL INFORMATION.
4. ALL FINISHED SPOT GRADES REFER TO TOP OF PAVEMENT OR FLOW LINE OF GUTTER, UNLESS OTHERWISE NOTED.
5. STORM SEWER CROSSINGS AND CONFLICTS ARE SHOWN ON THE PLAN SHEETS AND SHALL BE CONSTRUCTED PER DETAILS 1, 2, 3 AND 4 SHEET C-521. ANY VARIANCE FROM THESE DETAILS MUST BE APPROVED BY THE ENGINEER OF RECORD. WHICH DETAIL TO USE IS THE CONTRACTOR'S OPTION. AS-BUILT INFORMATION OF EACH CROSSING/CONFLICT MUST BE SUPPLIED
6. INVERT ELEVATIONS OF THE STORM WATER PIPE SHALL BE THE SAME ELEVATION AS THE INVERT OF THE STORM STRUCTURE.
7. FOR SUMMARY OF TRENCH BACKFILL AND BEDDING PLACEMENT SEE DETAIL 1 SHEET C-520.
8. AN AS-BUILT SURVEY WILL BE REQUIRED AT THE END OF THIS PROJECT TO INCLUDE VERIFICATION OF STORM SEWER ALIGNMENT FROM A SURVEYOR LICENSED IN THE STATE OF NORTH CAROLINA. THE SURVEY SHALL INCLUDE ALL PIPE SIZES AND INVERTS, INLET INVERTS, MANHOLE INVERTS, INLET ELEVATIONS AND ALL PIPE, INLET AND MANHOLE LOCATIONS. THE SURVEY SHALL INCLUDE STORM WATER POND OUTFALL LOCATIONS, INVERTS AND ELEVATIONS. PROVIDE THE SURVEY ON AN AS-BUILT VERSION OF CIVIL DRAWNGS SIGNED AND SEALED BY THE REGISTERED LAND SURVEYOR RESPONSIBLE FOR THE FIELD DATA COLLECTION.
9. REUSE AND SPREAD ORGANIC MATERIALS FROM THE SITE TO THE FULLEST EXTENT POSSIBLE IN NON-STRUCTURAL AREAS.
10. SHOP DRAWINGS WILL BE REQUIRED FOR THIS PROJECT.

XREF: 24x36 LOGO [L:\CivilPublic\Projects\6601490 Cherry Point RV Park\201 Design\20 AutoCAD\C\24x36 LOGO.dwg]
XREF: 6601490CM-41 [L:\CivilPublic\Projects\6601490 Cherry Point RV Park\201 Design\20 AutoCAD\C\6601490CM-41.dwg]
XREF: 6601490CM-10 [L:\CivilPublic\Projects\6601490 Cherry Point RV Park\201 Design\20 AutoCAD\C\6601490CM-10.dwg]
XREF: 6601490CM-11 [L:\CivilPublic\Projects\6601490 Cherry Point RV Park\201 Design\20 AutoCAD\C\6601490CM-11.dwg]

L:\CivilPublic\Projects\6601490 Cherry Point RV Park\201 Design\20 AutoCAD\C\6601490C-130.dwg Layout Name: C-130 Jun 06, 2012 - 11:14am PLOTTED BY: dbpoor

MYRA W. JONES, P.E.
CIVIL ENGINEER
NORTH CAROLINA PROFESSIONAL ENGINEER SEAL 031309 MYRA W. JONES
REG. NO. 031309

HASKELL ARCHITECTS and ENGINEERS, P.A.
NORTH CAROLINA – Architecture # 51202, Engineering # C–2136

HASKELL
The Haskell Company
111 Riverside Avenue
Jacksonville, Florida 32202
Phone # (904) 791-4500

MARINE CORPS AIR STATION CHERRY POINT

RECREATIONAL VEHICLE PARK

CHERRY POINT, NORTH CAROLINA

DATE	ISSUE/REVISION
06/11/12	FINAL CDs
06/04/12	CI
04/09/12	OPT.2_95%
3/26/12	CPI 3
12/2/11	CPI 2
10/19/11	EAD 2
9/8/11	CPI
8/29/11	RPI
7/29/11	EAD REVIEW
7/14/11	QDP
7/1/11	PR

We hereby expressly reserve the property rights to this drawing and it is not to be reproduced, copied in any format or manner whatsoever without first obtaining our express written permission and consent.

DRAWN BY: TML
CHECKED BY: TML

AE JOB NUMBER
6601490

GRADING AND DRAINAGE PLAN

C-130
SHEET NUMBER

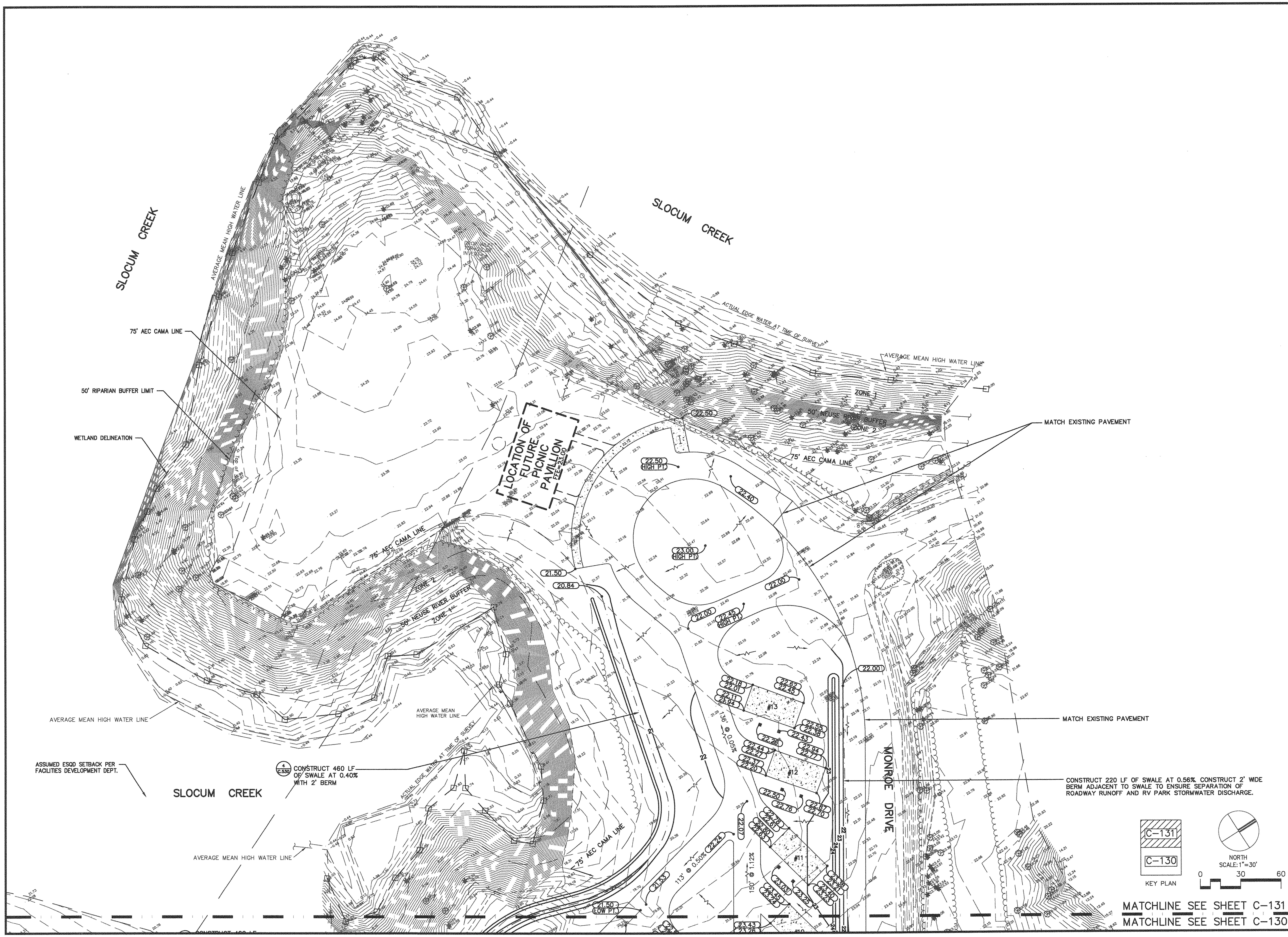

XREF: 24X36 LOGO [L:\CivilPublic\Projects\6601490 Cherry Point RV Park\201 Design\20 AutoCAD\B\24X36 LOGO.dwg]
XREF: 6601490CM-41 [L:\CivilPublic\Projects\6601490 Cherry Point RV Park\201 Design\20 AutoCAD\C\6601490CM-41.dwg]
XREF: 6601490CM-10 [L:\CivilPublic\Projects\6601490 Cherry Point RV Park\201 Design\20 AutoCAD\C\6601490CM-10.dwg]
XREF: 6601490CM-11 [L:\CivilPublic\Projects\6601490 Cherry Point RV Park\201 Design\20 AutoCAD\C\6601490CM-11.dwg]

L:\CivilPublic\Projects\6601490 Cherry Point RV Park\201 Design\20 AutoCAD\C\6601490C-131.dwg Layout Name: C-131 Jun 06, 2012 – 11:14am PLOTTED BY: dpoor

MARINE CORPS AIR STATION CHERRY POINT

RECREATIONAL VEHICLE PARK

CHERRY POINT, NORTH CAROLINA

HASKELL ARCHITECTS and ENGINEERS, P.A.
NORTH CAROLINA – Architecture # 51202, Engineering # C-2136

HASKELL

The Haskell Company
111 Riverside Avenue
Jacksonville, Florida 32202
Phone # (904) 791-4500

DATE	ISSUE/REVISION
06/11/12	FINAL CDs
06/04/12	CI
04/09/12	QPT.2_95%
3/26/12	CPI 3
12/2/11	CPI 2
10/19/11	EAD 2
9/8/11	CPI
8/29/11	RPI
7/29/11	EAD REVIEW
7/14/11	QDP
7/1/11	PR

We hereby expressly reserve the property rights to this drawing and it is not to be reproduced, copied in any format or manner whatsoever without first obtaining our express written permission and consent.

DRAWN BY: TML CHECKED BY: TML

AE JOB NUMBER 6601490

GRADING AND DRAINAGE PLAN

C-131
SHEET NUMBER

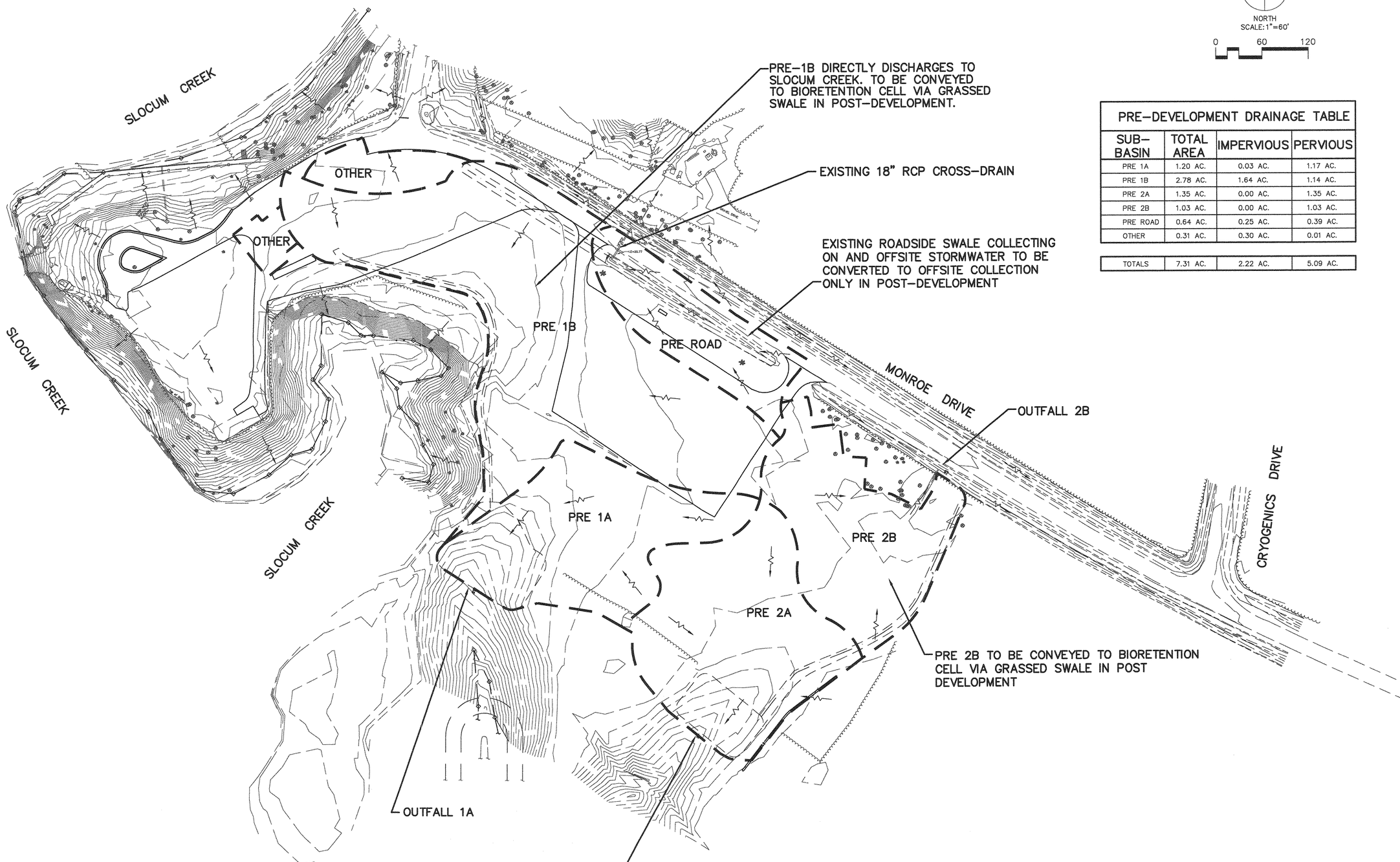

NORTH
SCALE: 1"=60'
0 60 120

PRE-DEVELOPMENT DRAINAGE TABLE			
SUB-BASIN	TOTAL AREA	IMPERVIOUS	PERVIOUS
PRE 1A	1.20 AC.	0.03 AC.	1.17 AC.
PRE 1B	2.78 AC.	1.64 AC.	1.14 AC.
PRE 2A	1.35 AC.	0.00 AC.	1.35 AC.
PRE 2B	1.03 AC.	0.00 AC.	1.03 AC.
PRE ROAD	0.64 AC.	0.25 AC.	0.39 AC.
OTHER	0.31 AC.	0.30 AC.	0.01 AC.
TOTALS	7.31 AC.	2.22 AC.	5.09 AC.

HASKELL ARCHITECTS and ENGINEERS, P.A.
NORTH CAROLINA - Architecture # 51202, Engineering # C-2136
The Haskell Company
111 Riverside Avenue
Jacksonville, Florida 32202
Phone # (904) 791-4500
HASKELL

MARINE CORPS AIR STATION CHERRY POINT
RECREATIONAL VEHICLE PARK
CHERRY POINT, NORTH CAROLINA

DATE	ISSUE/REVISION
06/11/12	FINAL CDs
06/04/12	CI
04/09/12	OPT.2_95%
3/26/12	CPI 3
12/2/11	CPI 2
10/19/11	EAD 2
9/8/11	CPI
7/29/11	EAD REVIEW
7/14/11	QDP

We hereby expressly reserve the property rights to this drawing and it is not to be reproduced, copied in any format or manner whatsoever without first obtaining our express written permission and consent.

DRAWN BY: TML
CHECKED BY: TML
AE JOB NUMBER 6601490

PRE DEVELOPMENT DRAINAGE PLAN

C-140
SHEET NUMBER

L:\Civil\Public\Projects\6601490 Cherry Point RV Park\201 Design\20 AutoCAD\C\6601490C-140.dwg Layout Name: C-140 Jun 06, 2012 - 11:15am PLOTTED BY: dpodor
XREF: 24X36 LOGO [L:\Civil\Public\Projects\6601490 Cherry Point RV Park\201 Design\20 AutoCAD\B\24X36 LOGO.dwg]
XREF: 6601490CM-42 [L:\Civil\Public\Projects\6601490 Cherry Point RV Park\201 Design\20 AutoCAD\C\6601490CM-42.dwg]
XREF: 6601490CM-10 [L:\Civil\Public\Projects\6601490 Cherry Point RV Park\201 Design\20 AutoCAD\C\6601490CM-10.dwg]
XREF: 6601490CM-11 [L:\Civil\Public\Projects\6601490 Cherry Point RV Park\201 Design\20 AutoCAD\C\6601490CM-11.dwg]
XREF: 6601490CM-41 [L:\Civil\Public\Projects\6601490 Cherry Point RV Park\201 Design\20 AutoCAD\C\6601490CM-41.dwg]

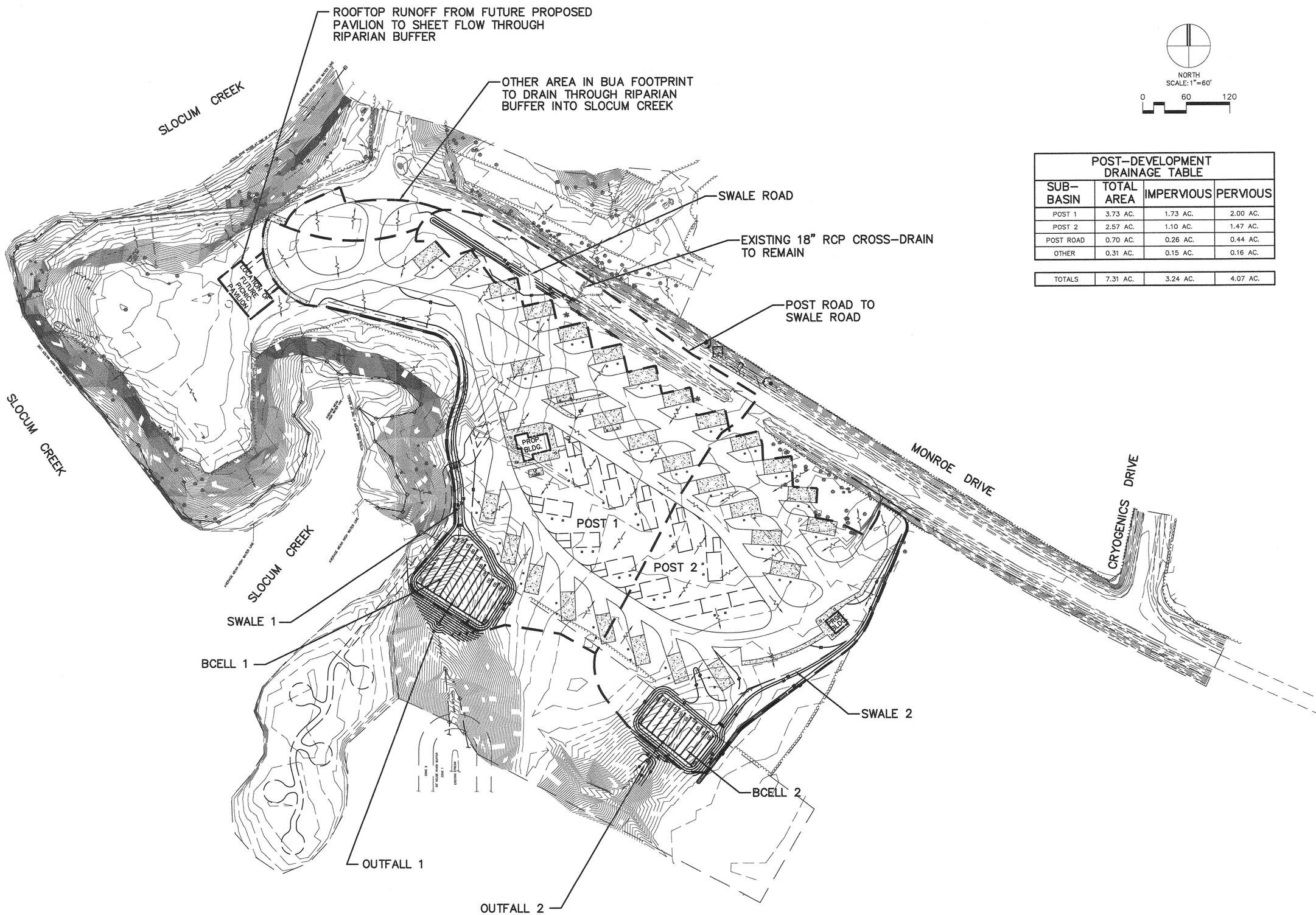

POST-DEVELOPMENT DRAINAGE TABLE			
SUB-BASIN	TOTAL AREA	IMPERVIOUS	PERVIOUS
POST 1	3.73 AC.	1.73 AC.	2.00 AC.
POST 2	2.57 AC.	1.10 AC.	1.47 AC.
POST ROAD	0.70 AC.	0.26 AC.	0.44 AC.
OTHER	0.31 AC.	0.15 AC.	0.16 AC.
TOTALS	7.31 AC.	3.24 AC.	4.07 AC.

HASKELL ARCHITECTS and ENGINEERS, P.A.
NORTH CAROLINA – Architecture # 51202, Engineering # C-2136
HASKELL
The Haskell Company
111 Riverside Avenue
Jacksonville, Florida 32202
Phone # (904) 791-4500

MARINE CORPS AIR STATION CHERRY POINT

RECREATIONAL VEHICLE PARK

CHERRY POINT, NORTH CAROLINA

DATE	ISSUE/REVISION
06/11/12	FINAL CDs
06/04/12	CI
04/09/12	OPT.2_95%
3/26/12	CPI 3
12/2/11	CPI 2
10/19/11	EAD 2
9/8/11	CPI
7/29/11	EAD REVIEW
7/14/11	QDP

We hereby expressly reserve the property rights to this drawing and it is not to be reproduced, copied in any format or manner whatsoever without first obtaining our express written permission and consent.

DRAWN BY: TML
CHECKED BY: TML

AE JOB NUMBER
6601490

POST DEVELOPMENT DRAINAGE PLAN

C-150
SHEET NUMBER

L:\CivilPublic\Projects\6601490 Cherry Point RV Park\201 Design\20 AutoCAD\C\6601490C-150.dwg Layout Name: C-150 Jun 06, 2012 - 11:15am PLOTTED BY: dqpoor
XREF: 24X36 LOGO [L:\CivilPublic\Projects\6601490 Cherry Point RV Park\201 Design\20 AutoCAD\B\24X36 LOGO.dwg]
XREF: 6601490CM-43 [L:\CivilPublic\Projects\6601490 Cherry Point RV Park\201 Design\20 AutoCAD\C\6601490CM-43.dwg]
XREF: 6601490CM-10 [L:\CivilPublic\Projects\6601490 Cherry Point RV Park\201 Design\20 AutoCAD\C\6601490CM-10.dwg]
XREF: 6601490CM-11 [L:\CivilPublic\Projects\6601490 Cherry Point RV Park\201 Design\20 AutoCAD\C\6601490CM-11.dwg]
XREF: 6601490CM-41 [L:\CivilPublic\Projects\6601490 Cherry Point RV Park\201 Design\20 AutoCAD\C\6601490CM-41.dwg]

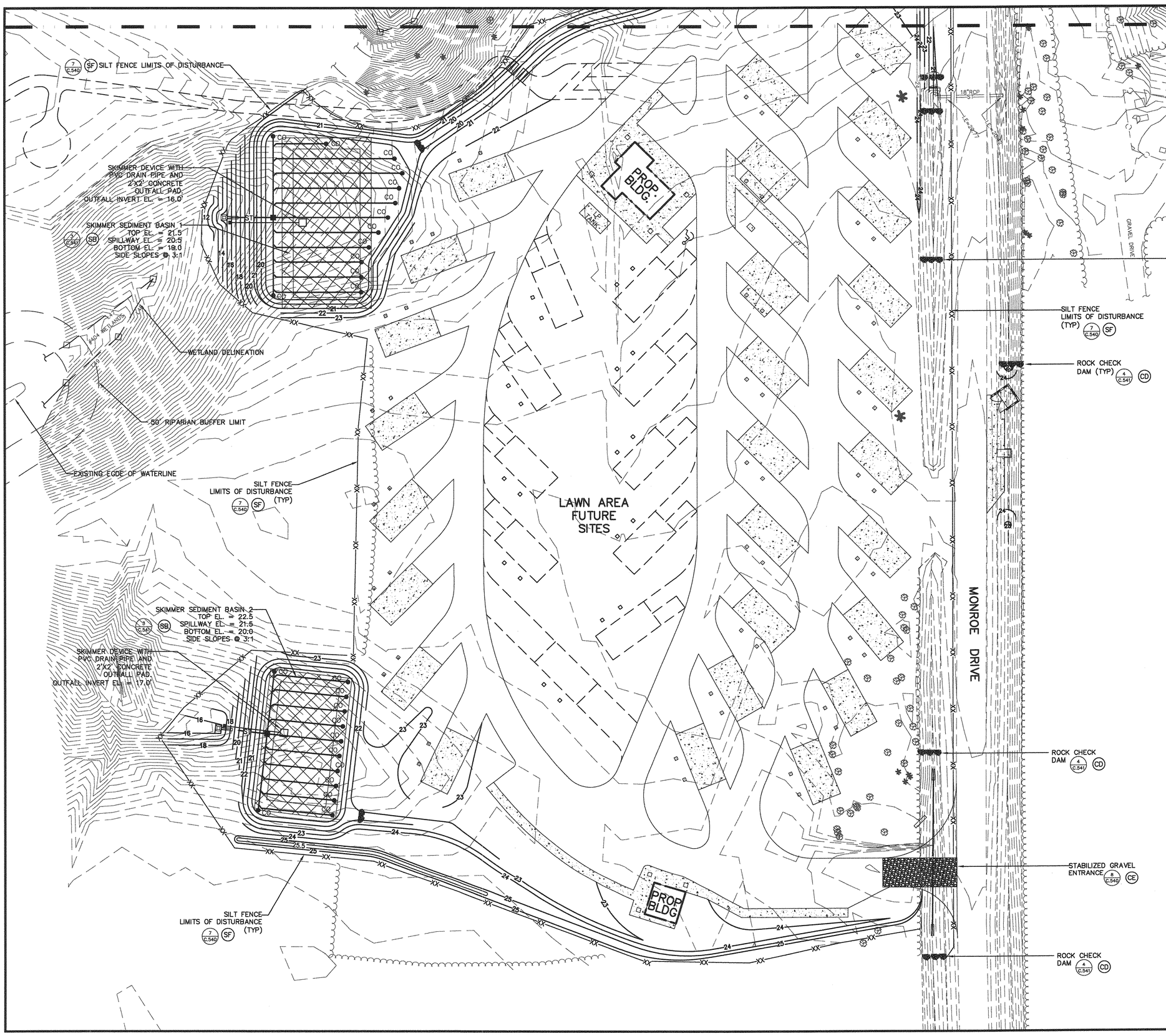

LEGEND

- SF — SILT FENCE/LIMITS OF DISTURBANCE
- CD — ROCK CHECK DAM
- CE — CONSTRUCTION ENTRANCE
- SB — SKIMMER SEDIMENT BASIN
- ——20—— PROPOSED FINAL CONTOUR

NOTES:
1. LIMITS OF DISTURBANCE AREA EQUALS 8.11 AC.
2. LIMITS OF DISTURBANCE ARE 50' MIN. OUTSIDE OF RIPARIAN BUFFER.
3. SEDIMENT BASINS SHALL BE CLEARED OF SEDIMENT AT END OF CONSTRUCTION AND CONVERTED TO FINAL BMP. SEE SWPPP FOR SEQUENCING NOTES AND SEE GRADING & DRAINAGE PLANS FOR FINAL LAYOUT.

C-161
C-160
KEY PLAN

NORTH
SCALE: 1"=30'
0 30 60

HASKELL ARCHITECTS and ENGINEERS, P.A.
NORTH CAROLINA - Architecture # 51202, Engineering # C-2136
HASKELL
The Haskell Company
111 Riverside Avenue
Jacksonville, Florida 32202
Phone # (904) 791-4500

MARINE CORPS AIR STATION CHERRY POINT
RECREATIONAL VEHICLE PARK
CHERRY POINT, NORTH CAROLINA

DATE	ISSUE/REVISION
06/11/12	FINAL CDs
06/04/12	CI
04/09/12	OPT.2_95%
3/26/12	CPI 3
12/2/11	CPI 2
10/19/11	EAD 2
9/8/11	CPI
8/29/11	RPI
7/29/11	EAD REVIEW
7/14/11	QDP
7/1/11	PR

We hereby expressly reserve the property rights to this drawing and it is not to be reproduced, copied in any format or manner whatsoever without first obtaining our express written permission and consent.

DRAWN BY: TML
CHECKED BY: TML
AE JOB NUMBER 6601490

EROSION AND SEDIMENT CONTROL PLAN

C-160
SHEET NUMBER

L:\CivilPublic\Projects\6601490 Cherry Point RV Park\201 Design\20 AutoCAD\C\6601490C-160.dwg Layout Name: C-160 Jun 06, 2012 - 11:15am PLOTTED BY: dbpoor
XREF: 24X36 LOGO [L:\CivilPublic\Projects\6601490 Cherry Point RV Park\201 Design\20 AutoCAD\B\24X36 LOGO.dwg]
XREF: 6601490CM-51 [L:\CivilPublic\Projects\6601490 Cherry Park\201 Design\20 AutoCAD\C\6601490CM-51.dwg]
XREF: 6601490CM-10 [L:\CivilPublic\Projects\6601490 Cherry Point RV Park\201 Design\20 AutoCAD\C\6601490CM-10.dwg]
XREF: 6601490CM-11 [L:\CivilPublic\Projects\6601490 Cherry Point RV Park\201 Design\20 AutoCAD\C\6601490CM-11.dwg]
XREF: 6601490CM-41 [L:\CivilPublic\Projects\6601490 Cherry Point RV Park\201 Design\20 AutoCAD\C\6601490CM-41.dwg]

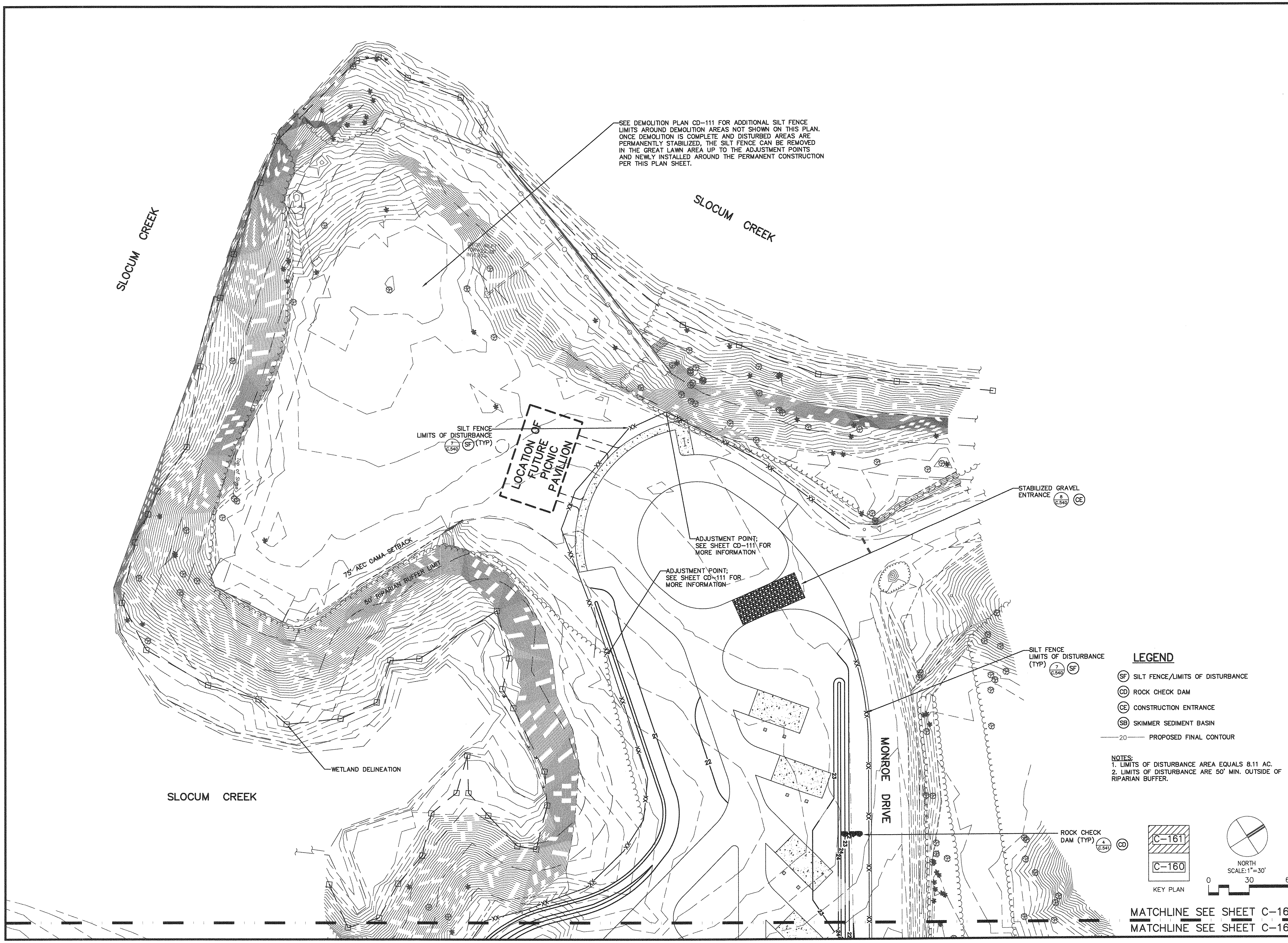

LEGEND

- (SF) SILT FENCE/LIMITS OF DISTURBANCE
- (CD) ROCK CHECK DAM
- (CE) CONSTRUCTION ENTRANCE
- (SB) SKIMMER SEDIMENT BASIN
- ——20—— PROPOSED FINAL CONTOUR

NOTES:
1. LIMITS OF DISTURBANCE AREA EQUALS 8.11 AC.
2. LIMITS OF DISTURBANCE ARE 50' MIN. OUTSIDE OF RIPARIAN BUFFER.

HASKELL ARCHITECTS and ENGINEERS, P.A.
NORTH CAROLINA – Architecture # 51202, Engineering # C-2136
HASKELL
The Haskell Company
111 Riverside Avenue
Jacksonville, Florida 32202
Phone # (904) 791-4500

MARINE CORPS AIR STATION CHERRY POINT

RECREATIONAL VEHICLE PARK

CHERRY POINT, NORTH CAROLINA

DATE	ISSUE/REVISION
06/11/12	FINAL CDs
06/04/12	CI
04/09/12	OPT.2_95%
3/26/12	CPI 3
12/2/11	CPI 2
10/19/11	EAD 2
9/8/11	CPI
8/29/11	RPI
7/29/11	EAD REVIEW
7/14/11	QDP
7/1/11	PR

We hereby expressly reserve the property rights to this drawing and it is not to be reproduced, copied in any format or manner whatsoever without first obtaining our express written permission and consent.

DRAWN BY: TML CHECKED BY: TML

AE JOB NUMBER 6601490

EROSION AND SEDIMENT CONTROL PLAN

C-161
SHEET NUMBER

L:\CivilPublic\Projects\6601490 Cherry Point RV Park\201 Design\20 AutoCAD\C\6601490C-161.dwg Layout Name: C-161 Jun 06, 2012 – 11:16am PLOTTED BY: dbpoor

XREF: 24X36 LOGO [L:\CivilPublic\Projects\6601490 Cherry Point RV Park\201 Design\20 AutoCAD\B\24X36 LOGO.dwg]
XREF: 6601490CM-32 [L:\CivilPublic\Projects\6601490 Cherry Point RV Park\201 Design\20 AutoCAD\C\6601490CM-32.dwg]

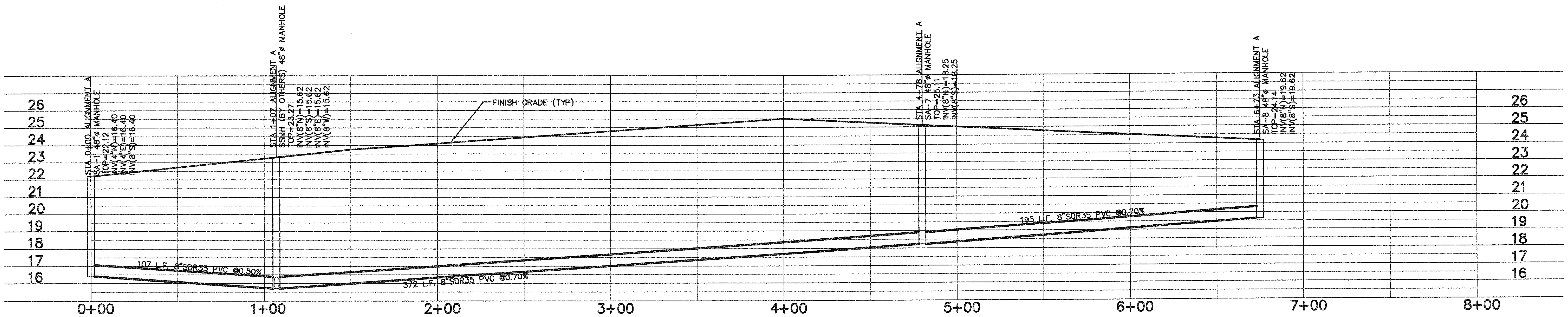

SANITARY SEWER ALIGNMENT "A"

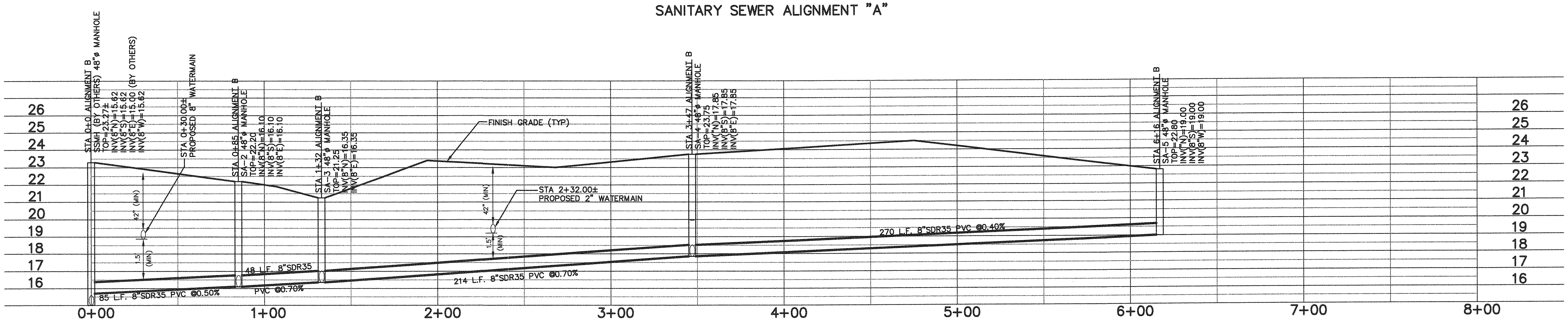

SANITARY SEWER ALIGNMENT "B"

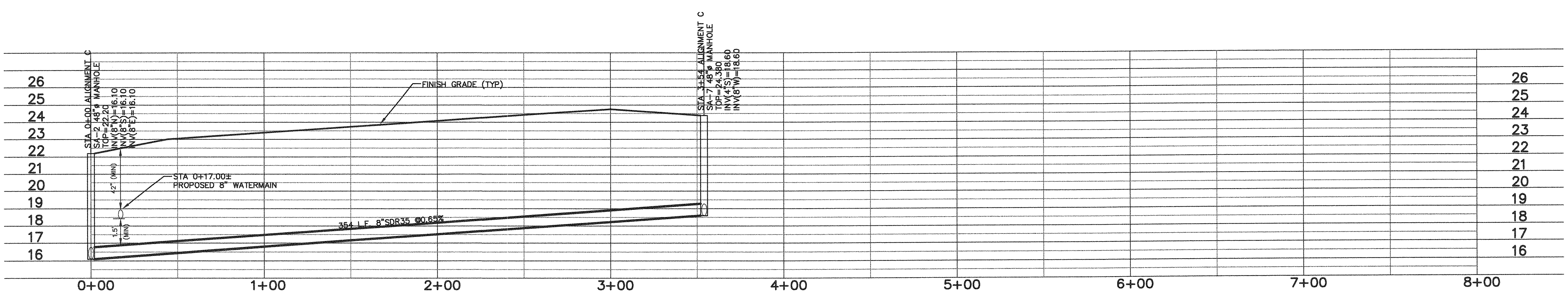

SANITARY SEWER ALIGNMENT "C"

SCALE: 1"=10' (V)
SCALE: 1"=30' (H)

HASKELL ARCHITECTS and ENGINEERS, P.A.
NORTH CAROLINA – Architecture # 51202, Engineering # C-2136

HASKELL
The Haskell Company
111 Riverside Avenue
Jacksonville, Florida 32202
Phone # (904) 791-4500

MARINE CORPS AIR STATION CHERRY POINT
RECREATIONAL VEHICLE PARK
CHERRY POINT, NORTH CAROLINA

DATE	ISSUE/REVISION
06/11/12	FINAL CDs
06/04/12	CI
04/09/12	OPT.2_95%
03/29/12	DENR WATER PI
3/26/12	CPI 3

We hereby expressly reserve the property rights to this drawing and it is not to be reproduced, copied in any format or manner whatsoever without first obtaining our express written permission and consent.

DRAWN BY:	CHECKED BY:
DBP	MWJ

AE JOB NUMBER
6601490

SANITARY SEWER PROFILES

C-220
SHEET NUMBER

L:\CivilPublic\Projects\6601490 Cherry Point RV Park\201 Design\20 AutoCAD\C\6601490C-220.dwg Layout Name: C-220 Jun 06, 2012 – 11:16am PLOTTED BY: dbpoor

LOCATION	MATERIAL DESCRIPTION	LIFT THICKNESS	TEST METHOD FOR MAX. DRY DENSITY	COMPACTION	RECOMMENDED MOISTURE CONTENT (% POINTS)
BUILDING AREA SUBGRADE Note: Area of fill and compaction shall extend five feet beyond building footprint.	Conforming to Unified Soil Classification System (USCS) Types: SP, SW, SP–SM, SP–SC SW–SC, SC, CL Max. Particle size= 3" PI≤20; LL≤ 40 Max. Organic Content = 2%	8 INCHES	Modified Proctor (ASTM D1557)	98% (TOP 12") 95% (BELOW 12")	+/– 3 %
PAVEMENT AREA SUBGRADE (within vehicle use area) Note: Area of fill and compaction shall extend two feet beyond pavement limits.(Top 12")	Conforming to Unified Soil Classification System (USCS) Types: SP, SW, SP–SM, SP–SC SW–SC, SC, CL Max. Particle size= 3" PI≤20; LL≤ 40 Max. Organic Content = 2%	8 INCHES	Modified Proctor (ASTM D1557)	98%	+/– 3 %
PAVEMENT AREA SUBGRADE (outside vehicle use area) Note: Area of fill and compaction shall extend two feet beyond pavement limits.(Below 12")	Conforming to Unified Soil Classification System (USCS) Types: SP, SW, SP–SM, SP–SC SW–SC, SC, CL Max. Particle size= 3" PI≤20; LL≤ 40 Max. Organic Content = 2%	8 INCHES	Modified Proctor (ASTM D1557)	95%	+/– 3 %
OTHER AREAS	Conforming to Unified Soil Classification System (USCS) Types: SP, SW, SP–SM, SP–SC SW–SC, SC, CL Max. Particle size= 3" PI≤20; LL≤ 40 Max. Organic Content = 2%	8 INCHES	Modified Proctor (ASTM D1557)	85%	+/– 3 %

NOTE:
ASTM D–698 FOR SP–SC, SW–SC, SC AND CL TYPE SOILS

SUMMARY OF FILL PLACEMENT (1)

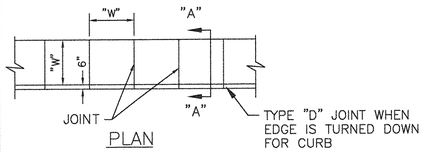

PLAN

TABLE OF SIDEWALK JOINTS	
TYPE	LOCATION
"D"	TRANSVERSE JOINT AT INTERVALS EQUAL TO THE SIDEWALK WIDTH
"E"	AT THE P.C'S AND P.T.'S OF EACH OF CURVES, ABRUPT CHANGES IN DIRECTION, AND WHERE NEW SIDEWALK ABUTS EXISTING SIDEWALK OR OTHER EXIST. CONCRETE SURFACE STRUCTURES.

NOTE: TYPE "D" JOINT MAY BE EITHER TOOLED IN WET CONCRETE OR SAWCUT WITHIN 18 HOURS OF PLACEMENT OF CONCRETE.

CONCRETE FOR SIDEWALK SHALL BE 3,500 PSI.

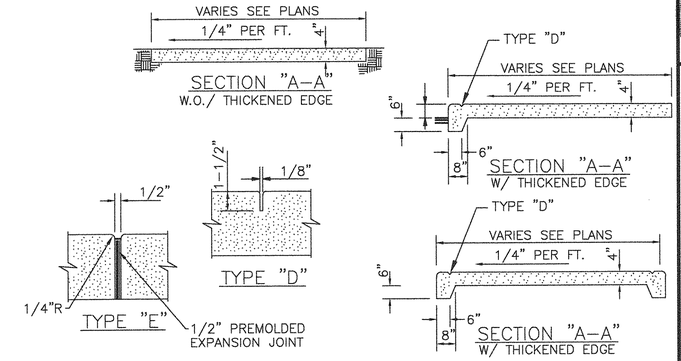

NOTE:
A 24" TURNDOWN WILL BE REQUIRED FOR SIDEWALK AT POND PERIMETER AREA

CONCRETE SIDEWALK DETAILS (2)

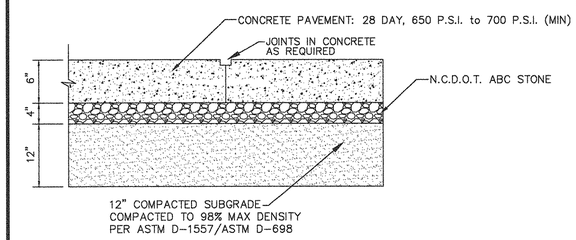

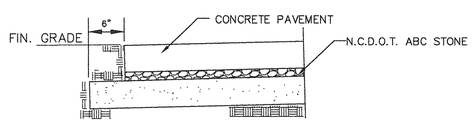

EDGE OF PAVEMENT DETAIL

CONCRETE PAD FOR RV CAMPSITE (3)

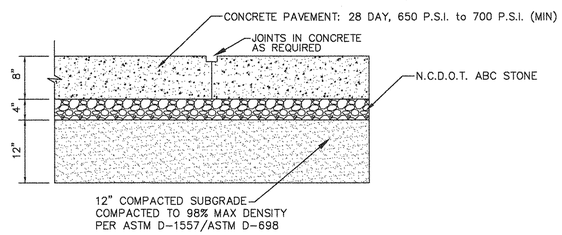

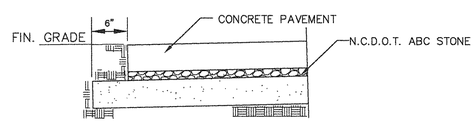

EDGE OF PAVEMENT DETAIL

SEE SHEET AS–111 FOR ADDITIONAL DUMPSTER INFORMATION AND LOCATION OF FOOTINGS

CONCRETE DUMPSTER PAD (4)

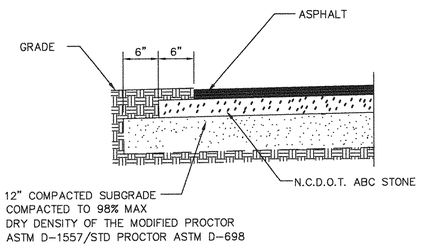

PAVEMENT STRUCTURE THICKNESS TABLE			
TYPE	SUB–GRADE	BASE	SF9.5
ASPHALT	12"	8"	2"
OVERLAY	–	–	1 1/2"

NOTE:
ASTM D–698 FOR SP–SC, SW–SC, SC AND CL TYPE SOILS

ASPHALT PAVEMENT SECTION (5)

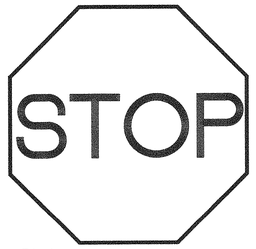

R1–1
30" X 30"

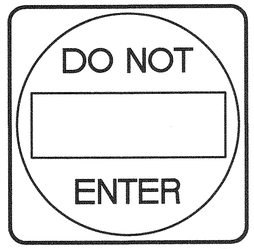

R5–1
30" X 30"

STOP SIGN & DO NOT ENTER SIGN (6)

X (7)

X (8)

X (9)

X (10)

HASKELL ARCHITECTS and ENGINEERS, P.A.
NORTH CAROLINA – Architecture # 51202, Engineering # C–2135
The Haskell Company
11 Riverside Avenue
Jacksonville, Florida 32202
Phone # (904) 791-4500
HASKELL

MARINE CORPS AIR STATION CHERRY POINT

RECREATIONAL VEHICLE PARK

CHERRY POINT, NORTH CAROLINA

DATE	ISSUE/REVISION
06/11/12	FINAL CDs
06/04/12	CI
04/09/12	OPT.2_95%
3/26/12	CPI 3
12/2/11	CPI 2
10/19/11	EAD 2
9/8/11	CPI
8/29/11	RPI
7/29/11	EAD REVIEW
7/14/11	QDP
7/1/11	PR

We hereby expressly reserve the property rights to this drawing and it is not to be reproduced, copied in any format or manner whatsoever without first obtaining our express written permission and consent.

DRAWN BY: TML
CHECKED BY: TML

AE JOB NUMBER
6601490

SITE DETAILS

C-510
SHEET NUMBER

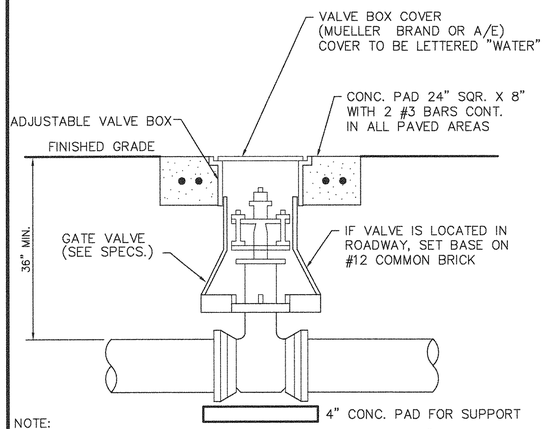

NOTE:
1. ALL BURIED GATE VALVES SHALL BE PROVIDED WITH A 2" SQUARE OPERATING NUT.
2. USE MECHANICAL JOINT RESTRAINERS AS REQUIRED.

GATE VALVE AND BOX (1)

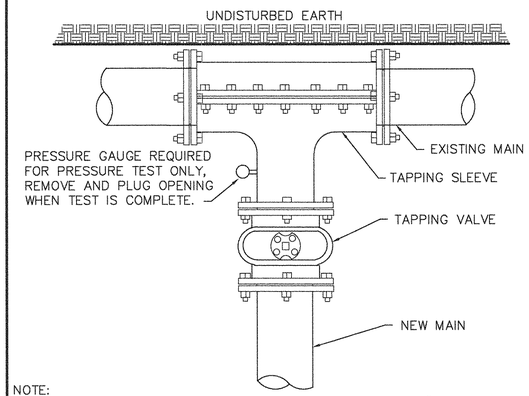

NOTE:
1. ALL BURIED GATE VALVES SHALL BE PROVIDED WITH A 2" SQUARE OPERATING NUT.
2. USE MECHANICAL JOINT RESTRAINERS AS REQUIRED.

TAPPING SLEEVE AND VALVE (2)

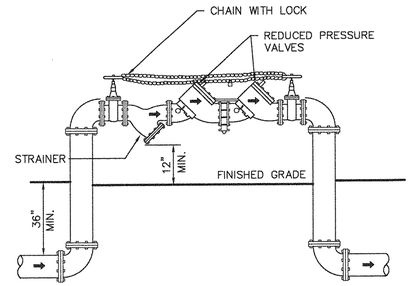

NOTE: VALVES TO BE CHAINED AND LOCKED IN OPEN POSITION

ELEVATION

NOTES:
1. USE MECHANICAL JOINT RESTRAINERS AS REQUIRED
2. PROVIDE FREEZE PROTECTION. REFER TO SPECIFICATIONS.

6" FOR DOMESTIC WATER

REDUCED PRESSURE ZONE BACKFLOW PREVENTER (3)

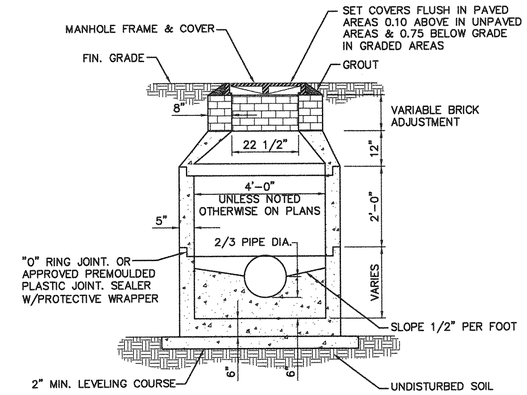

SANITARY SEWER MANHOLE (4)

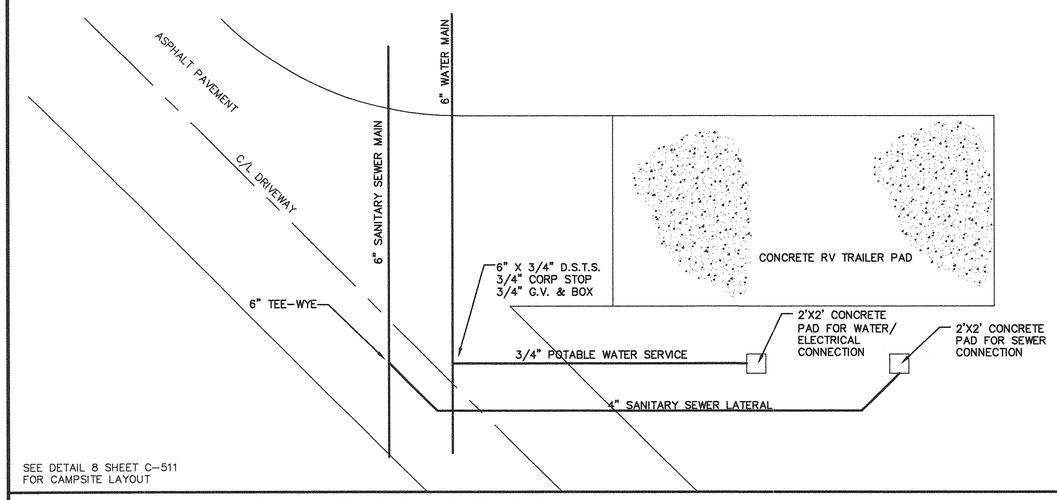

SEE DETAIL 8 SHEET C-511
FOR CAMPSITE LAYOUT

TYPICAL WATER & SEWER LAYOUT AT RV UTILITY PAD (5)

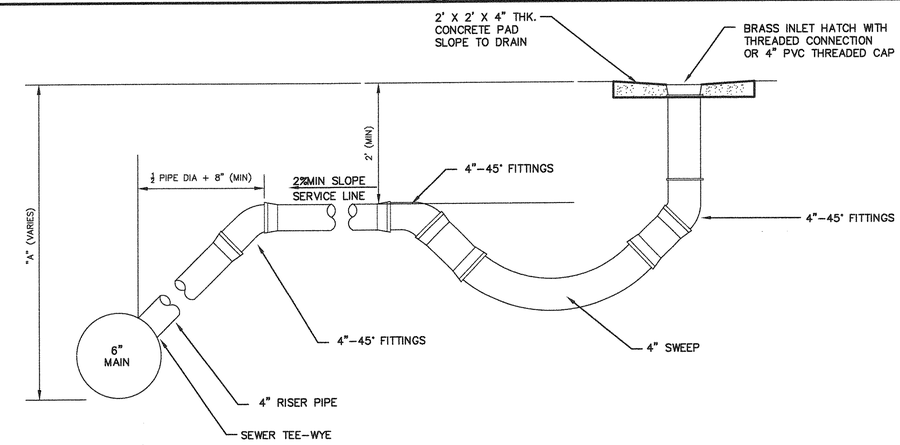

NOTES:
WHEN A IS LESS THAN 7'-0" DELETE RISER PIPE, USE 45° ELL IN PLACE OF 90° ELL
TURN SEWER MAIN TEE TOWARD SERVICE SIDE AT A 45° AND USE 1 CU.FT. CONCRETE BLOCKING AT TEE

CAMPSITE SEWER DROP CONNECTION DETAIL (6)

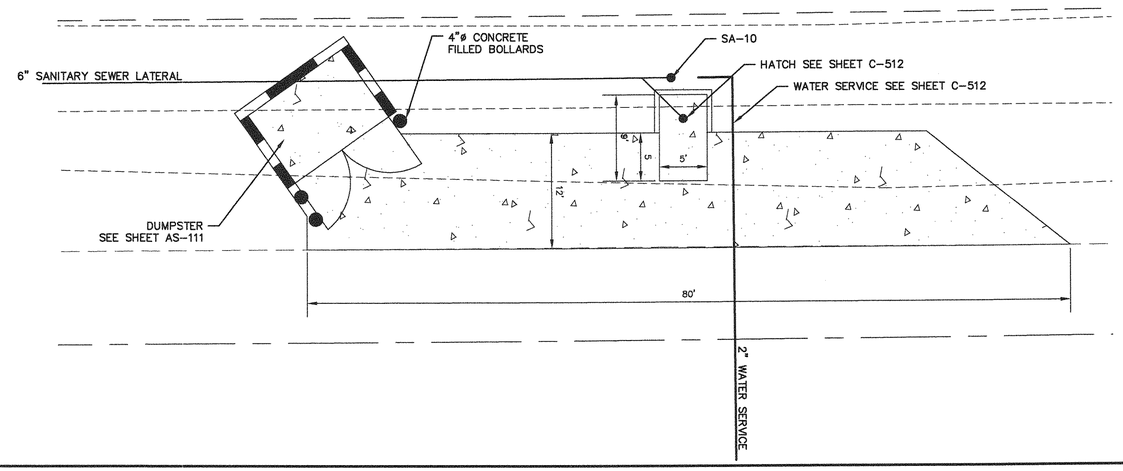

ENLARGED DUMP STATION PLAN (7)

HASKELL ARCHITECTS and ENGINEERS, P.A.
NORTH CAROLINA – Architecture # 51202, Engineering # C-2136
The Haskell Company
111 Riverside Avenue
Jacksonville, Florida 32202
Phone # (904) 791-4500
HASKELL

MARINE CORPS AIR STATION CHERRY POINT

RECREATIONAL VEHICLE PARK

CHERRY POINT, NORTH CAROLINA

DATE	ISSUE/REVISION
06/11/12	FINAL CDs
06/04/12	CI
04/09/12	OPT.2_95%
03/29/12	DENR WATER PI
3/26/12	CPI 3
12/2/11	CPI 2
10/19/11	EAD 2
9/8/11	CPI
8/29/11	RPI
7/29/11	EAD REVIEW
7/14/11	QDP
7/1/11	PR

We hereby expressly reserve the property rights to this drawing and it is not to be reproduced, copied in any format or manner whatsoever without first obtaining our express written permission and consent.

DRAWN BY: TML
CHECKED BY: TML

AE JOB NUMBER
6601490

UTILITY DETAILS

C-521
SHEET NUMBER

ADA PARKING NOTES:

(1) ALL HANDICAPPED PARKING SPACES MUST BE SIGNED AND MARKED PER STANDARDS ESTABLISHED BY A.B.A.
(2) PARKING SPACES AND ACCESS ISLES SHALL BE LEVEL WITH SURFACE SLOPES NOT EXCEEDING 1:50 (2%) IN ALL DIRECTIONS.
(3) H.C. PARKING SPACES SHALL BE DESIGNATED AS RESERVED BY A PAINTED SYMBOL OF ACCESSIBILITY AND A SIGN SHOWING THE ACCESSIBLE SYMBOL.
(4) H.C. SIGNS ARE TO BE LOCATED DIRECTLY IN FRONT OF AN ACCESSIBLE PARKING SPACE AND MOUNTED, EITHER ON A POLE OR A WALL, A MINIMUM OF SEVEN (7) FEET ABOVE THE PARKING SURFACE'S GRADE.

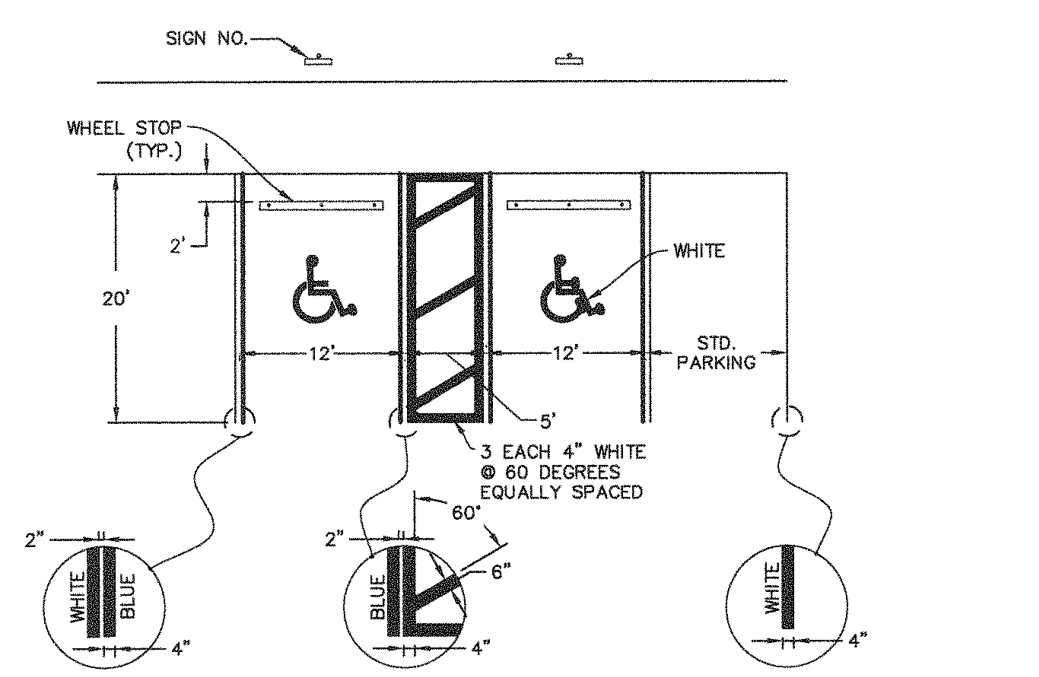

HANDICAP RAMP (1)

HANDICAPPED PARKING SIGN SHALL CONFORM TO A.B.A. DESIGN SPECIFICATIONS

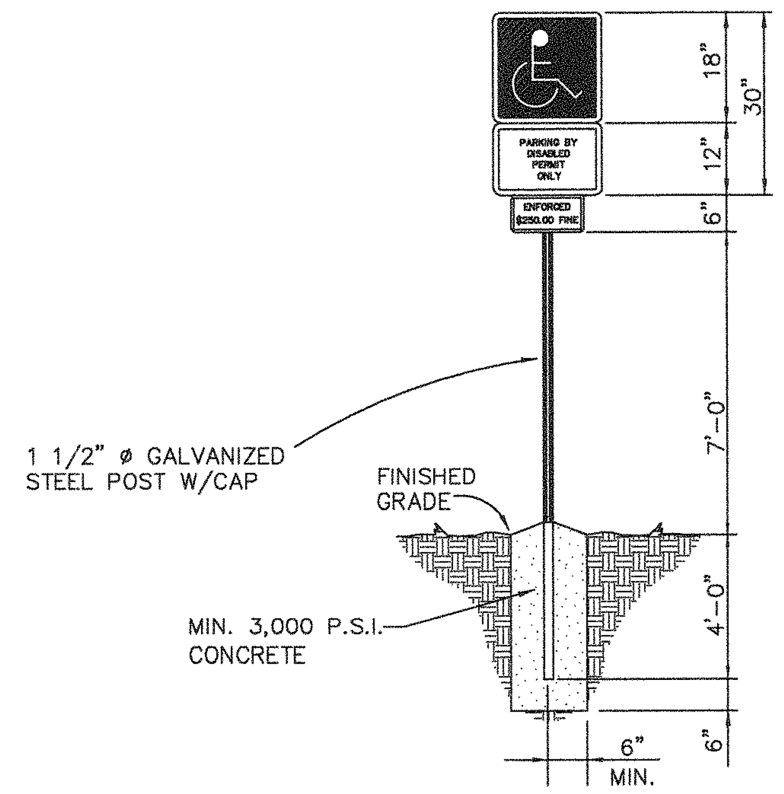

NOTE: ALL SIGNS SHALL BE BOLTED TO POST

HANDICAP PARKING SIGN (2)

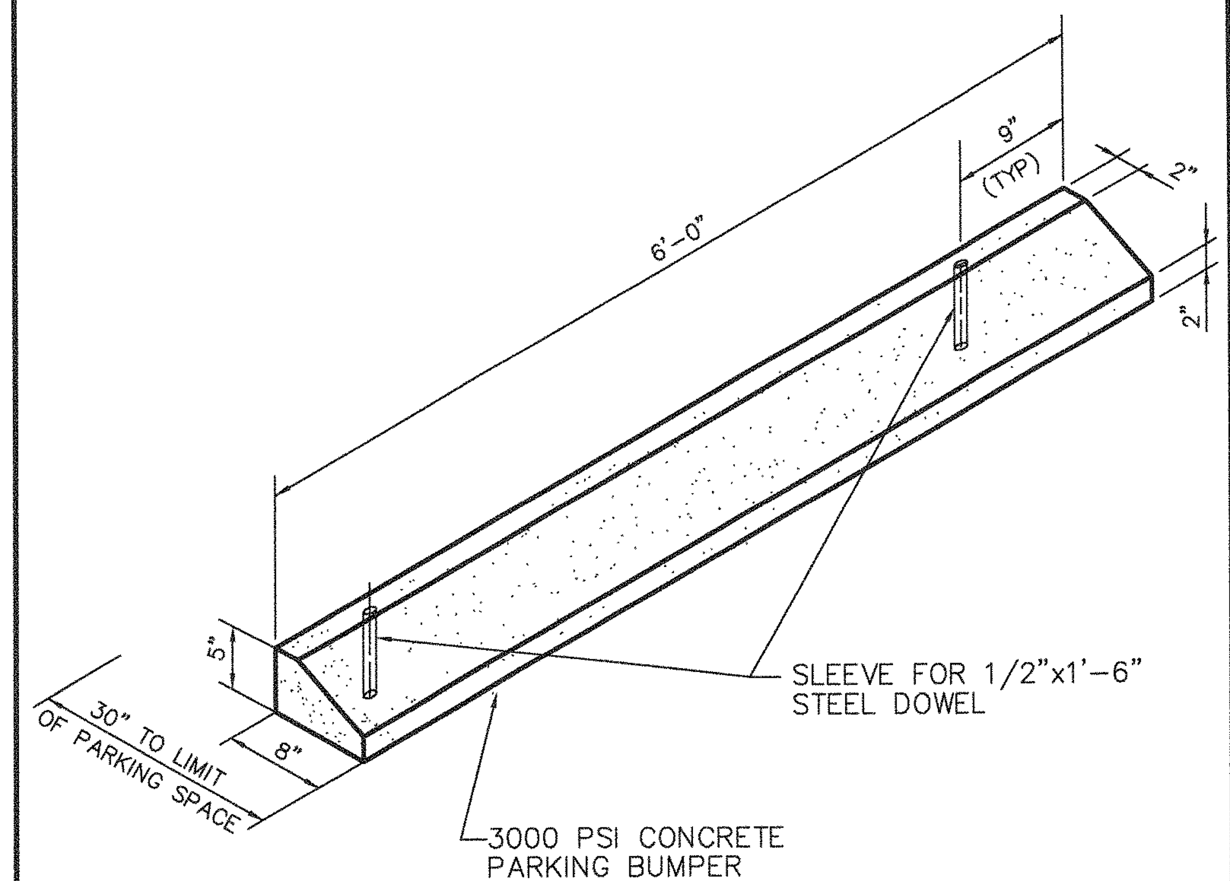

WHEEL STOP (3)

X (3A)

X (3B)

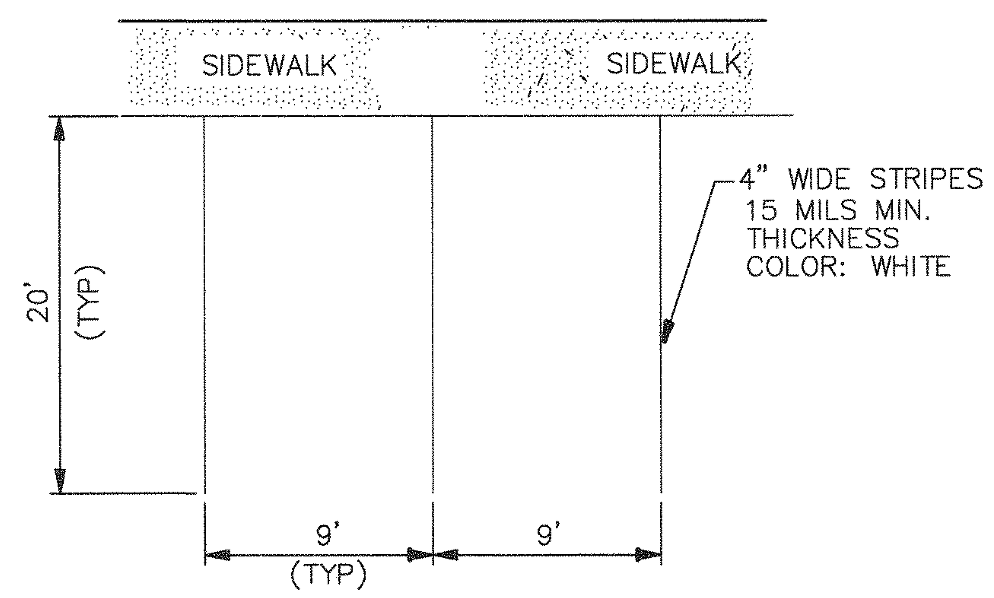

PARKING SPACE (4)

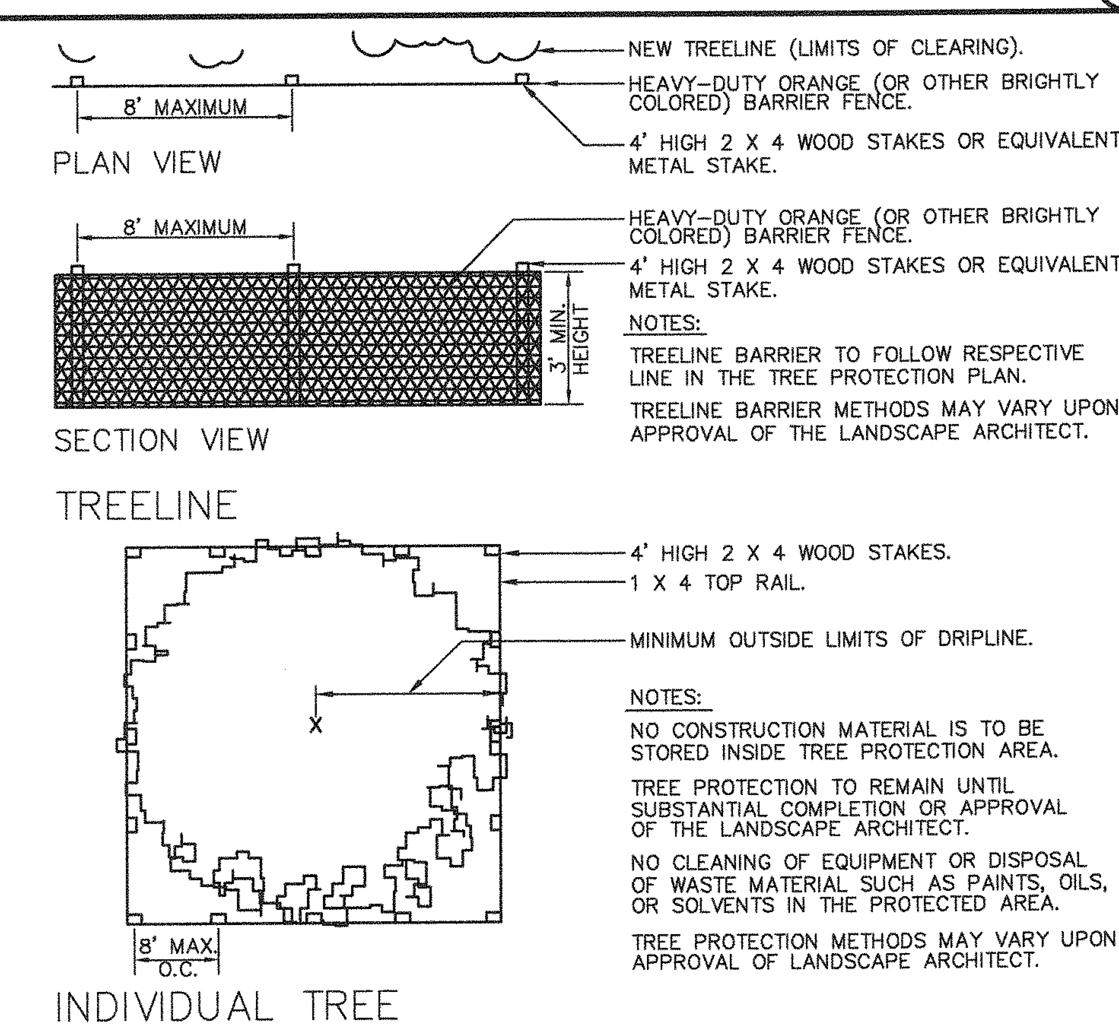

NOTES:
TREELINE BARRIER TO FOLLOW RESPECTIVE LINE IN THE TREE PROTECTION PLAN.
TREELINE BARRIER METHODS MAY VARY UPON APPROVAL OF THE LANDSCAPE ARCHITECT.

NOTES:
NO CONSTRUCTION MATERIAL IS TO BE STORED INSIDE TREE PROTECTION AREA.
TREE PROTECTION TO REMAIN UNTIL SUBSTANTIAL COMPLETION OR APPROVAL OF THE LANDSCAPE ARCHITECT.
NO CLEANING OF EQUIPMENT OR DISPOSAL OF WASTE MATERIAL SUCH AS PAINTS, OILS, OR SOLVENTS IN THE PROTECTED AREA.
TREE PROTECTION METHODS MAY VARY UPON APPROVAL OF LANDSCAPE ARCHITECT.

TREE PROTECTION (5)

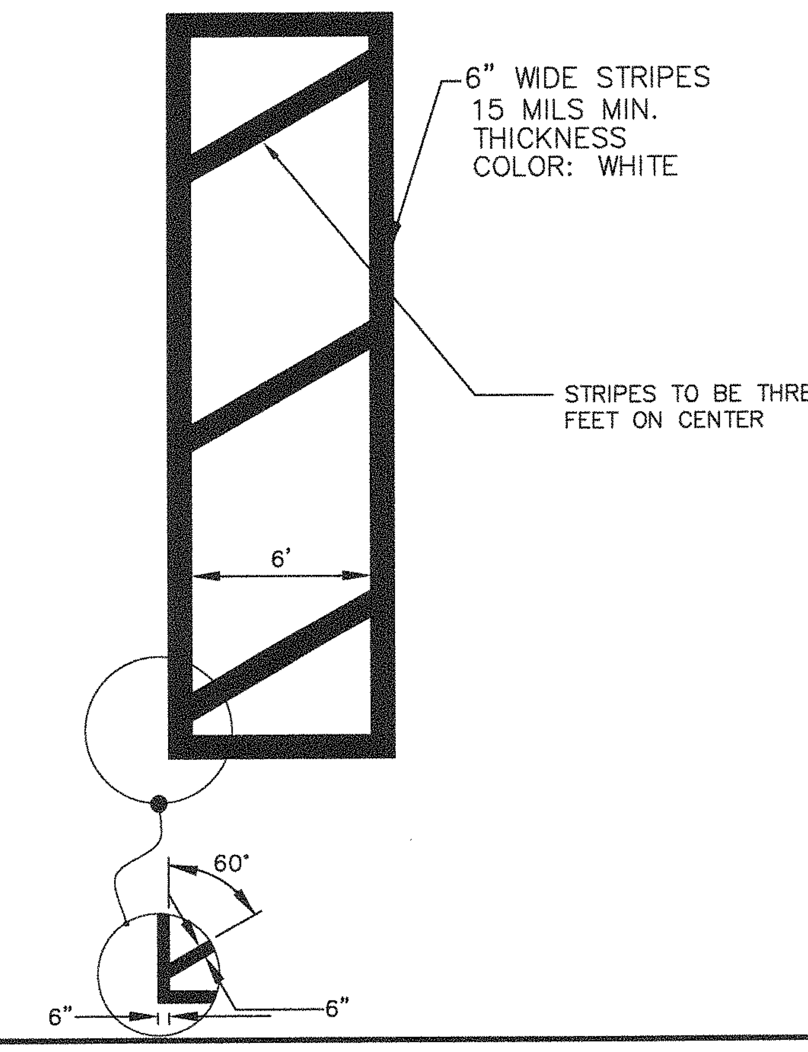

PEDESTRIAN CROSSWALK (6)

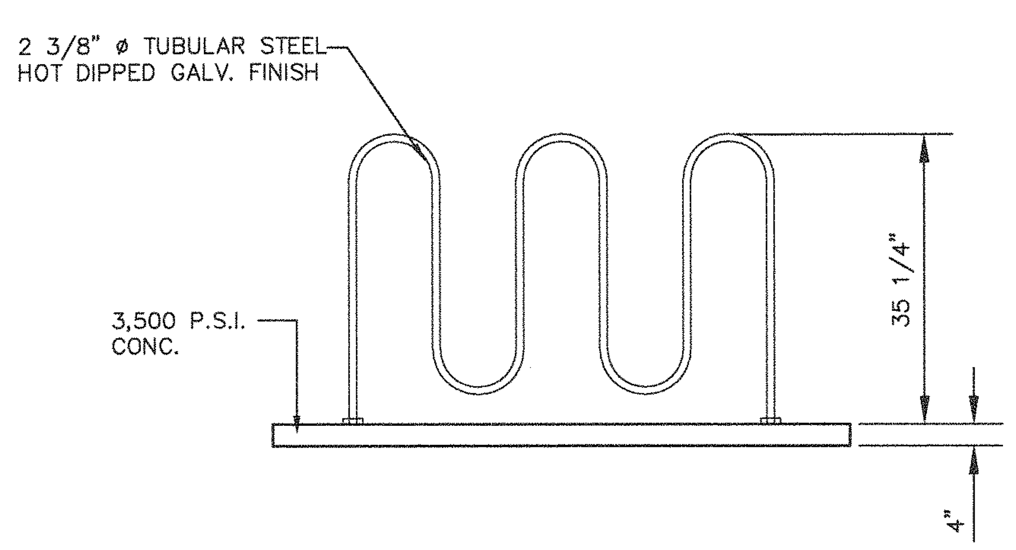

NOTES:
1. BICYCLE RACK BY THE RIBBON RACK RB-D AS MANUFACTURED BY BRAND IR INTERNATIONAL, INC. OR APPROVED EQUAL
2. ONE MANUFACTURER MODEL RB05SG OR APPROVED EQUAL.

BICYCLE RACK (7)

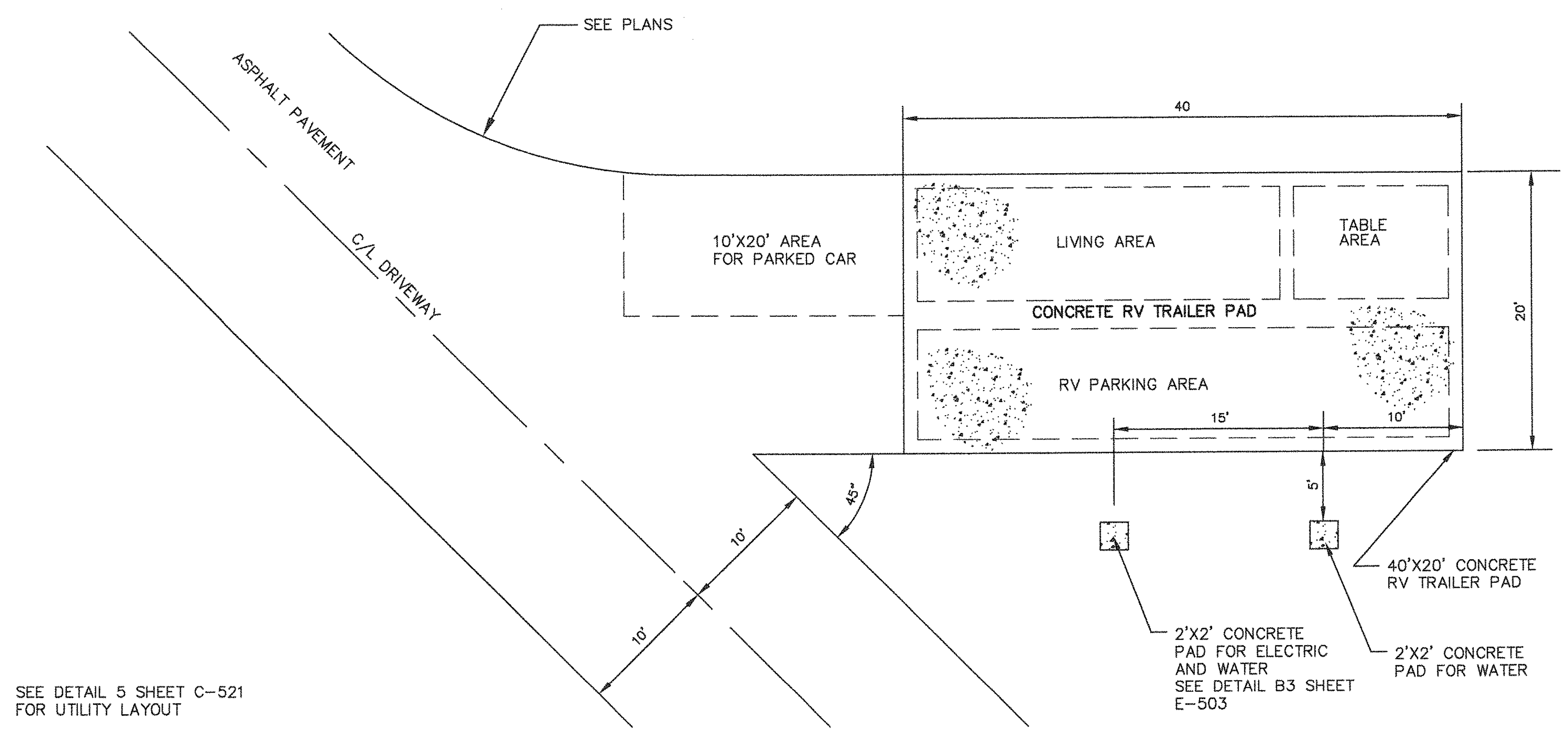

SEE DETAIL 5 SHEET C-521 FOR UTILITY LAYOUT

TYPICAL RV CAMPSITE LAYOUT (8)

X (9)

HASKELL ARCHITECTS and ENGINEERS, P.A.
NORTH CAROLINA – Architecture # 51202, Engineering # C-2136

HASKELL
The Haskell Company
111 Riverside Avenue
Jacksonville, Florida 32202
Phone # (904) 791-4500

CIVIL ENGINEER
REG. NO. 031309

MARINE CORPS AIR STATION CHERRY POINT

RECREATIONAL VEHICLE PARK

CHERRY POINT, NORTH CAROLINA

DATE	ISSUE/REVISION
06/11/12	FINAL CDs
06/04/12	CI
04/09/12	OPT.2_95%
3/26/12	CPI 3
12/2/11	CPI 2
10/19/11	EAD 2
9/8/11	CPI
8/29/11	RPI
7/29/11	EAD REVIEW
7/14/11	QDP
7/1/11	PR

We hereby expressly reserve the property rights to this drawing and it is not to be reproduced, copied in any format or manner whatsoever without first obtaining our express written permission and consent.

DRAWN BY:	CHECKED BY:
TML	TML

AE JOB NUMBER
6601490

SITE DETAILS

C-511
SHEET NUMBER

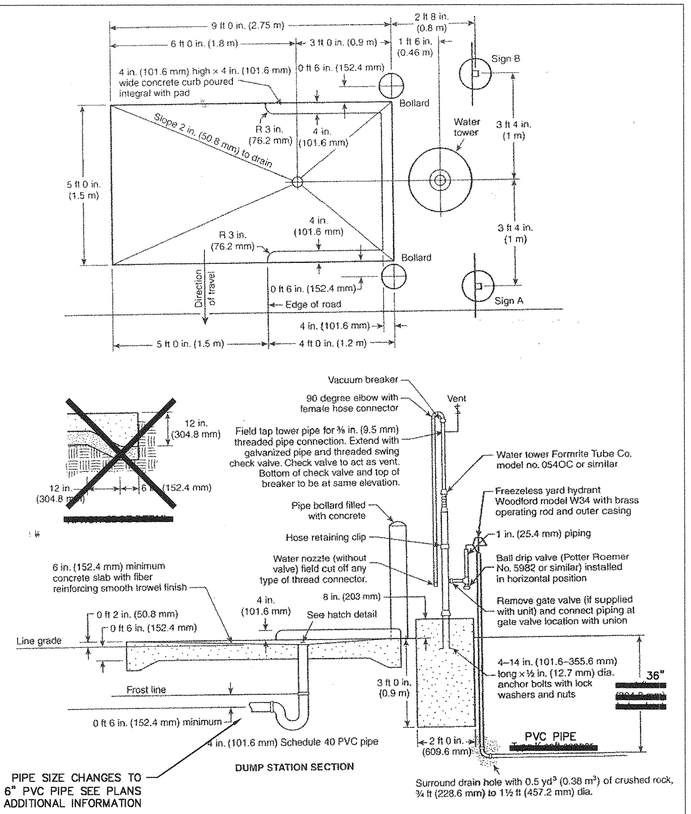

FIGURE B.1(b) Optional Arrangement for a Sanitary Disposal Station on a Recreational Vehicle Park or Campground.

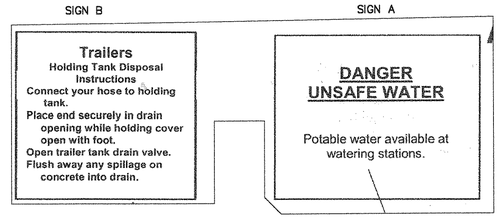

SIGN INFORMATION

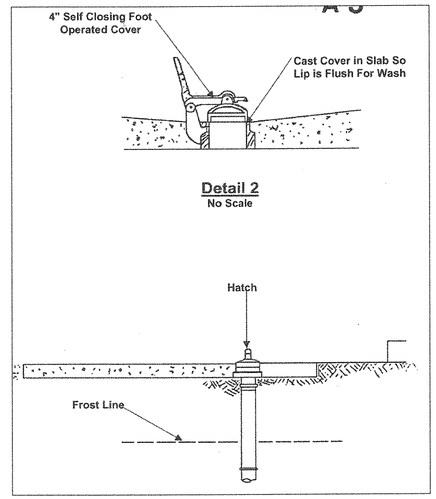

HATCH DETAIL

DUMP STATION DETAILS

1

X

2

X

3

X

4

X

5

X

6

HASKELL ARCHITECTS and ENGINEERS, P.A.
NORTH CAROLINA – Architecture # 51202, Engineering # C–2136
HASKELL
The Haskell Company
111 Riverside Avenue
Jacksonville, Florida 32202
Phone # (904) 791-4500

MARINE CORPS AIR STATION CHERRY POINT

RECREATIONAL VEHICLE PARK

CHERRY POINT, NORTH CAROLINA

DATE	ISSUE/REVISION
06/11/12	FINAL CDs
06/04/12	CI

We hereby expressly reserve the property rights to this drawing and it is not to be reproduced, copied in any format or manner whatsoever without first obtaining our express written permission and consent.

DRAWN BY: TML
CHECKED BY: TML

AE JOB NUMBER
6601490

DUMP STATION DETAILS

C-512
SHEET NUMBER

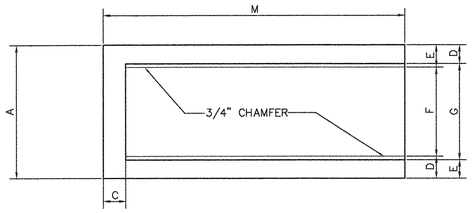

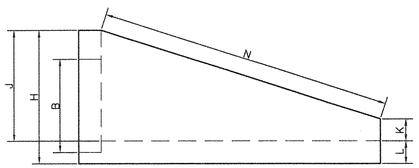

MATERIALS:
CONCRETE: PER MANFACTURERS RECOMMENDATION
REINFORCING: PER MANUFACTURERS RECOMMEDATION
#6 BARS OVER OPENING (OPTIONAL)
*GRADE 40 OR EQUILALENT WELDED WIRE MESH

PIPE SIZE	A	B	C	D	E	F	G	H	J	K	L	M	N
15"–18"	2'–7"	2'–1"	6"	6"	6 3/4"	1'–6"	1'–7"	2'–10"	2'–4"	8"	6"	6'–10"	7'–0"
24"	2'–11"	2'–8"	6"	6"	6 3/4"	1'–11"	2'–0"'	3'–6"	3'–1"	7 1/2"	5"	10'–0"	10'–3 1/2"
30"	3'–6"	3'–2"	6"	6"	6 3/4"	2'–5"	2'–6 1/2"	3'–9"	3'–5"	7"	5"	11'–5"	11'–8 1/4"
36"	4'–1"	3'–10"	6"	6"	6 3/4"	2'–9"	3'–0"	4'–6"	4'–0"	6"	6"	14'–0"	14'–4 1/2"

MITERED END SECTIONS (1)

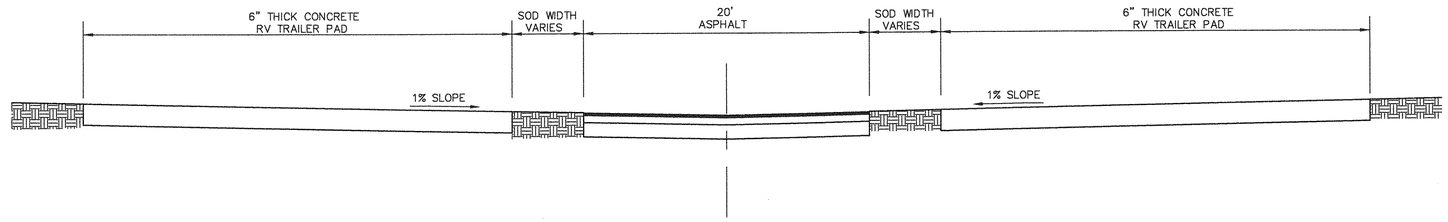

INVERTED CROWN PAVEMENT CROSS–SECTIONS (2)

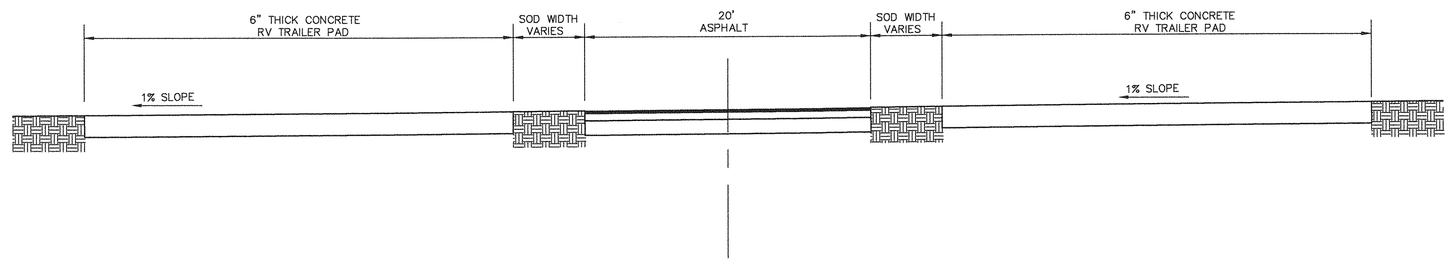

SUPER–ELEVATED PAVEMENT CROSS–SECTIONS (3)

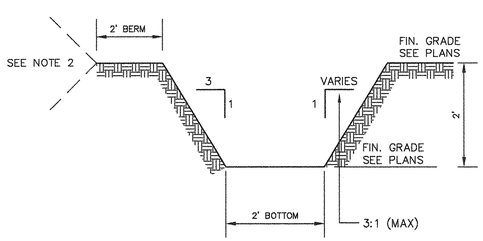

NOTES:
1. CONSTRUCT 2' WIDE BERM ON OUTSIDE OF SWALE AT 2' HEIGHT.
2. TIE UP OR TIE DOWN TO EXISTING GRADE, OUTSIDE OF BERM, AT NO STEEPER THAN 3:1 SIDE SLOPES.

SWALE 1 CROSS–SECTION (4)

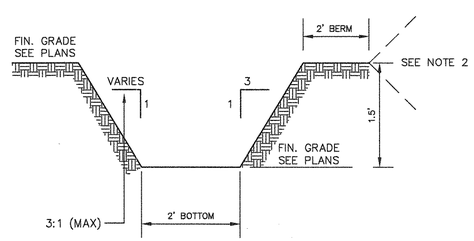

NOTES:
1. CONSTRUCT 2' WIDE BERM ON OUTSIDE OF SWALE AT 1.5' HEIGHT.
2. TIE UP OR TIE DOWN TO EXISTING GRADE, OUTSIDE OF BERM, AT NO STEEPER THAN 3:1 SIDE SLOPES.

SWALE 2 CROSS–SECTION (5)

X (6)

X (7)

HASKELL ARCHITECTS and ENGINEERS, P.A.
NORTH CAROLINA – Architecture # 51202, Engineering # C–2136
HASKELL
The Haskell Company
111 Riverside Avenue
Jacksonville, Florida 32202
Phone # (904) 791-4500

MARINE CORPS AIR STATION CHERRY POINT

RECREATIONAL VEHICLE PARK

CHERRY POINT, NORTH CAROLINA

DATE	ISSUE/REVISION
06/11/12	FINAL CDs
06/04/12	CI
04/09/12	OPT.2_95%
3/26/12	CPI 3
12/2/11	CPI 2
10/19/11	EAD 2
9/8/11	CPI
8/29/11	RPI
7/29/11	EAD REVIEW
7/14/11	QDP
7/1/11	PR

We hereby expressly reserve the property rights to this drawing and it is not to be reproduced, copied in any format or manner whatsoever without first obtaining our express written permission and consent.

DRAWN BY: TML
CHECKED BY: TML

AE JOB NUMBER
6601490

GRADING AND DRAINAGE DETAILS

C-530
SHEET NUMBER

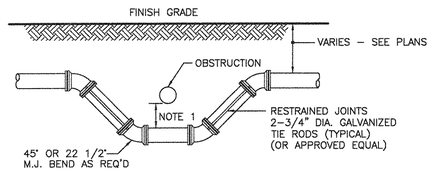

NOTES:

1. A WATER MAIN SHOULD CROSS OVER PIPES WHEREVER POSSIBLE MAINTAINING A 36 INCH COVER FOR ALL PIPE CONDITIONS AND 18 INCH SEPARATION AS A MINIMUM.
2. COAT TIE RODS WITH A COAL TAR ENAMEL AFTER ASSEMBLY (2 COATS MINIMUM)
3. TIE RODS MAY BE OMITTED WHEN OTHER APPROVED METHODS OF RESTRAINING ARE UTILIZED.

UTILITY CROSSING FITTING TYPE A (1)

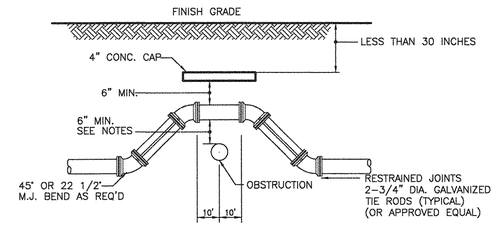

NOTES:

1. A WATER MAIN SHOULD CROSS OVER PIPES WHEREVER POSSIBLE MAINTAINING A 36 INCH COVER FOR ALL PIPE CONDITIONS AND 18 INCH SEPARATION AS A MINIMUM.
2. COAT TIE RODS WITH A COAL TAR ENAMEL AFTER ASSEMBLY (2 COATS MINIMUM)
3. TIE RODS MAY BE OMITTED WHEN OTHER APPROVED METHODS OF RESTRAINING ARE UTILIZED.

UTILITY CROSSING FITTING TYPE B (2)

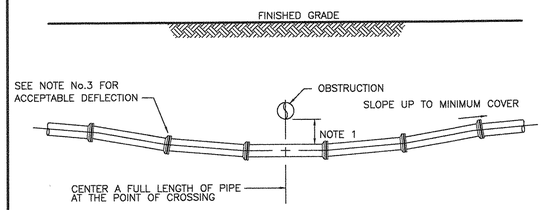

NOTES:

1. A WATER MAIN SHOULD CROSS OVER PIPES WHEREVER POSSIBLE MAINTAINING A 36 INCH COVER FOR ALL PIPE CONDITIONS AND 18 INCH SEPARATION AS A MINIMUM.
2. THE DEFLECTION TYPE CROSSING SHALL BE USED WHENEVER POSSIBLE. ONLY UNDER SPECIFIC ORDERS BY THE ENGINEER SHALL THE FITTING TYPE CROSSING BE ALLOWED.
3. CONSTRUCT CROSSING USING 75% OF MANUFACTURERS MAXIMUM JOINT DEFLECTION (MAXIMUM).

UTILITY CROSSING DEFLECTION DETAIL (3)

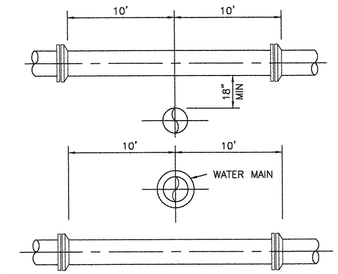

NOTES:

1. A WATER MAIN SHOULD CROSS OVER PIPES WHEREVER POSSIBLE MAINTAINING A 36 INCH COVER FOR ALL PIPE CONDITIONS AND 18 INCH SEPARATION AS A MINIMUM.
2. WHEREVER A WATER MAIN CROSSES UNDER A SEWER MAIN, OR CROSSES OVER WITH LESS THAN 18 INCHES VERTICAL SEPARATION, THEN D.I.P. SHALL BE USED FOR BOTH PIPES FOR A DISTANCE OF 20 FEET CENTERED ON CROSSING WITH NO JOINTS WITHIN 10 FEET OF THE CROSSING.
3. 18 INCH SEPARATION SHOULD BE MAINTAINED BETWEEN ALL PIPES (STORM, SEWER, WATER) WHENEVER POSSIBLE. 12 INCHES IS THE ABSOLUTE MINIMUM SEPARATION WITH D.I.P. REQUIRED FOR ANY SEPARATION LESS THAN 18 INCHES.
4. MAINTAIN 10 FEET HORIZONTAL SEPARATION BETWEEN WATER AND SEWER AS A MINIMUM.
5. 3 FOOT HORIZONTAL CLEARANCE SHALL BE PROVIDED BETWEEN UTILITIES AND ANY OBSTRUCTIONS (CATCH BASINS, CONCRETE POLES, ETC.)
6. 5 FOOT HORIZONTAL CLEARANCE SHALL BE PROVIDED BETWEEN UTILITIES AND TREES.

GENERAL UTILITY CROSSING REQUIREMENTS (4)

LOCATION	MATERIAL DESCRIPTION	MAX. LOOSE LIFT THICKNESS	TEST METHOD FOR MAX. DRY DENSITY	COMPACTION	MOISTURE CONTENT (% POINTS)
PIPE BEDDING WITHIN CONTROLLED AREAS	Max. particle size= 1.0 inches Max Plasticity Index (PI) ≤ 20 Max. Liquid Limit (LL) ≤ 40 Max. Organic Content = 2% USCS Classification: SW, SP	6 INCHES	MODIFIED PROCTOR (ASTM D1557)	95%	+/– 3
PIPE HAUNCHING AND INITIAL BACKFILL WITHIN CONTROLLED AREAS	Max. particle size= 1.0 inches Max Plasticity Index (PI) ≤ 20 Max. Liquid Limit (LL) ≤ 40 Max. Organic Content = 2% USCS Classification: SW, SP	6 INCHES	MODIFIED PROCTOR (ASTM D1557)	95%	+/– 3
BACKFILL ABOVE PIPE TO SUBGRADE WITHIN CONTROLLED AREAS	Max. particle size= 1.0 inches Max Plasticity Index (PI) ≤ 20 Max. Liquid Limit (LL) ≤ 40 Max. Organic Content = 2% USCS Classification: SW, SP	6 INCHES	MODIFIED PROCTOR (ASTM D1557)	95%	+/– 3
PIPE BEDDING OTHER AREAS	Max. particle size= 1.0 inches Max Plasticity Index (PI) ≤ 20 Max. Liquid Limit (LL) ≤ 40 Max. Organic Content = 2% USCS Classification: SW, SP	6 INCHES	MODIFIED PROCTOR (ASTM D1557)	95%	+/– 3
PIPE HAUNCHING AND INITIAL BACKFILL OTHER AREAS	Max. particle size= 1.0 inches Max Plasticity Index (PI) ≤ 20 Max. Liquid Limit (LL) ≤ 40 Max. Organic Content = 2% USCS Classification: SW, SP	6 INCHES	MODIFIED PROCTOR (ASTM D1557)	95%	+/– 3
BACKFILL ABOVE PIPE TO SUBGRADE OTHER AREAS	Max. particle size= 1.0 inches Max Plasticity Index (PI) ≤ 20 Max. Liquid Limit (LL) ≤ 40 Max. Organic Content = 2% USCS Classification: SW, SP	6 INCHES	MODIFIED PROCTOR (ASTM D1557)	95%	+/– 3

SUMMARY OF TRENCH BACKFILL AND BEDDING PLACEMENT (5)

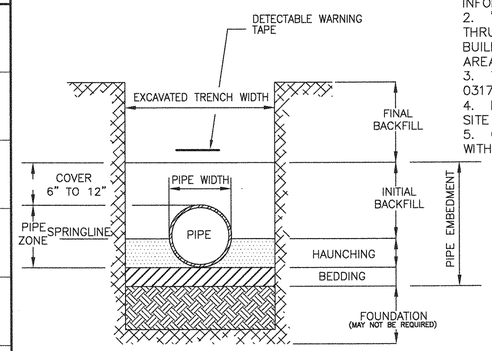

TRENCH CROSS–SECTION

GENERAL NOTES:

1. REFER TO GEOTECHNICAL REPORT DATED AUGUST 29, 2011 BY COMPANY ECS CAROLINAS, L.L.C., FOR ADDITIONAL INFORMATION.
2. "CONTROLLED "AREAS" ARE DEFINED AS THESE AREAS THRUOUT PLUS SEVEN FEET BEYOND THE PROPOSED BUILDINGS, AND THRUOUT PLUS FIVE FEET BEYOND PAVEMENT AREAS, PLUS THRUOUT SIGNIFICANT SLOPES.
3. TESTING FREQUENCY IS IDENTIFIED IN PROJECT SPECIFICATION 0317 – TRENCHING AND SITE UTILITIES
4. MATERIAL DESCRIPTIONS APPLY TO ON–SITE AND OFF–SITE MATERIALS
5. CHANGES TO THE ABOVE CRITERIA CAN ONLY BE MADE WITH APPROVAL OF THE ENGINEER.

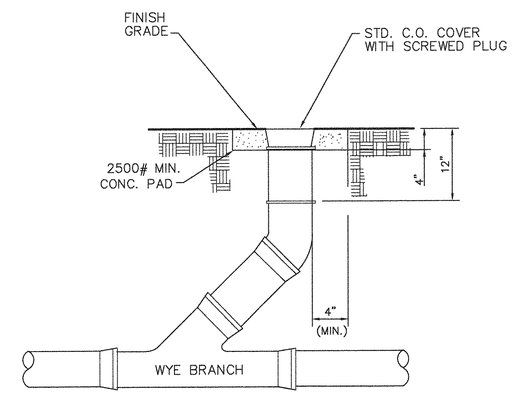

SANITARY SEWER CLEANOUT (6)

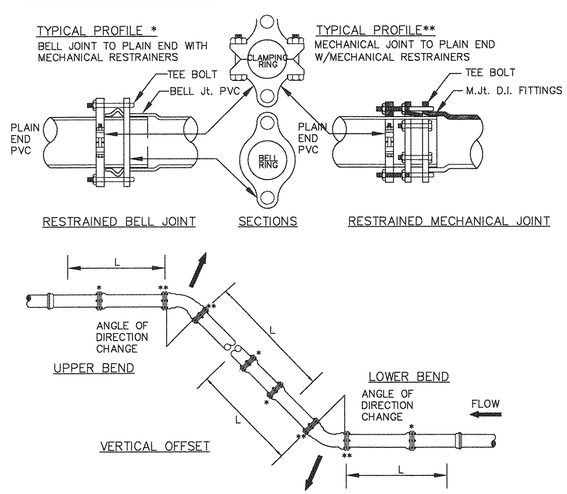

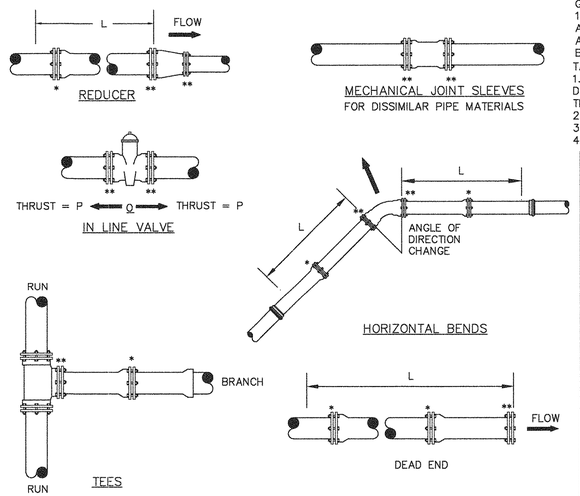

GENERAL NOTES:

1. ALL FITTINGS MUST BE RESTRAINED BY ONE OF THE FOLLOWING METHODS
A. MECHANICAL RESTRAINERS AT FITTINGS AND AT ADJACENT JOINT TO A LENGTH AS SPECIFIED ON FOLLOWING CHART.
B. TIE RODS AT FITTINGS THROUGH JOINTS TO A LENGTH AS SPECIFIED IN CHART.

TABLE ASSUMPTIONS:

1. PVC PIPE, SAFETY FACTOR = 1.5, TEST PRESSURE = 150 PSI, 3 FOOT BURY DEPTH TO TOP OF PIPE. BRANCH ON TEE IS ONE SIZE SMALLER THAN RUN OF TEE SIZE AND 20 FEET OF PIPE IS INSTALLED PAST THE TEE ON THE RUN SIDE.
2. VERTICAL OFFSETS ARE 3 FEET DEEP ON TOP AND 8 FEET DEEP ON BOTTOM.
3. REDUCERS ARE CALCULATED FOR ONE SIZE REDUCTION.
4. ALL OTHER CONDITIONS WILL REQUIRE ADDITIONAL CALCULATIONS

MIN. LENGTH TO BE RESTRAINED ON EACH SIDE OF FITTING									
NOMINAL PIPE SIZE (INCHES)	11 1/4° HORIZONTAL BEND	22 1/2° HORIZONTAL BEND	45° HORIZONTAL BEND	90° HORIZONTAL BEND	HORIZONTAL TEES	HORIZONTAL PLUGS & VALVES	45° VERTICAL OFFSET UPPER LENGTH/LOWER LENGTH	22 1/2° VERTICAL OFFSET UPPER LENGTH/LOWER LENGTH	REDUCER TO ONE SIZE SMALLER LENGTH ON LARGER SIZE SIDE
4	2	4	7	18	20–RUN 1–BRANCH	39	16/3	8/1	N/A
6	2	5	10	25	20–RUN 1–BRANCH	55	23/4	11/2	28
8	3	6	13	32	20–RUN 1–BRANCH	72	30/5	14/3	30
10	4	8	16	38	20–RUN 1–BRANCH	86	36/6	17/3	29
12	4	9	19	45	20–RUN 1–BRANCH	102	42/8	20/4	50

MECHANICAL RESTRAINT LENGTHS AND DETAILS (7)

X (8)

HASKELL ARCHITECTS and ENGINEERS, P.A.
NORTH CAROLINA – Architecture # 51202, Engineering # C–2136
The Haskell Company
111 Riverside Avenue
Jacksonville, Florida 32202
Phone # (904) 791-4500
HASKELL

MARINE CORPS AIR STATION CHERRY POINT

RECREATIONAL VEHICLE PARK

CHERRY POINT, NORTH CAROLINA

DATE	ISSUE/REVISION
06/11/12	FINAL CDs
06/04/12	CI
04/09/12	OPT.2_95%
03/29/12	DENR WATER PI
3/26/12	CPI 3
12/2/11	CPI 2
10/19/11	EAD 2
9/8/11	CPI
7/29/11	EAD REVIEW
7/14/11	QDP
7/1/11	PR

We hereby expressly reserve the property rights to this drawing and it is not to be reproduced, copied in any format or manner whatsoever without first obtaining our express written permission and consent.

DRAWN BY: TML
CHECKED BY: TML

AE JOB NUMBER
6601490

UTILITY DETAILS

C-520
SHEET NUMBER

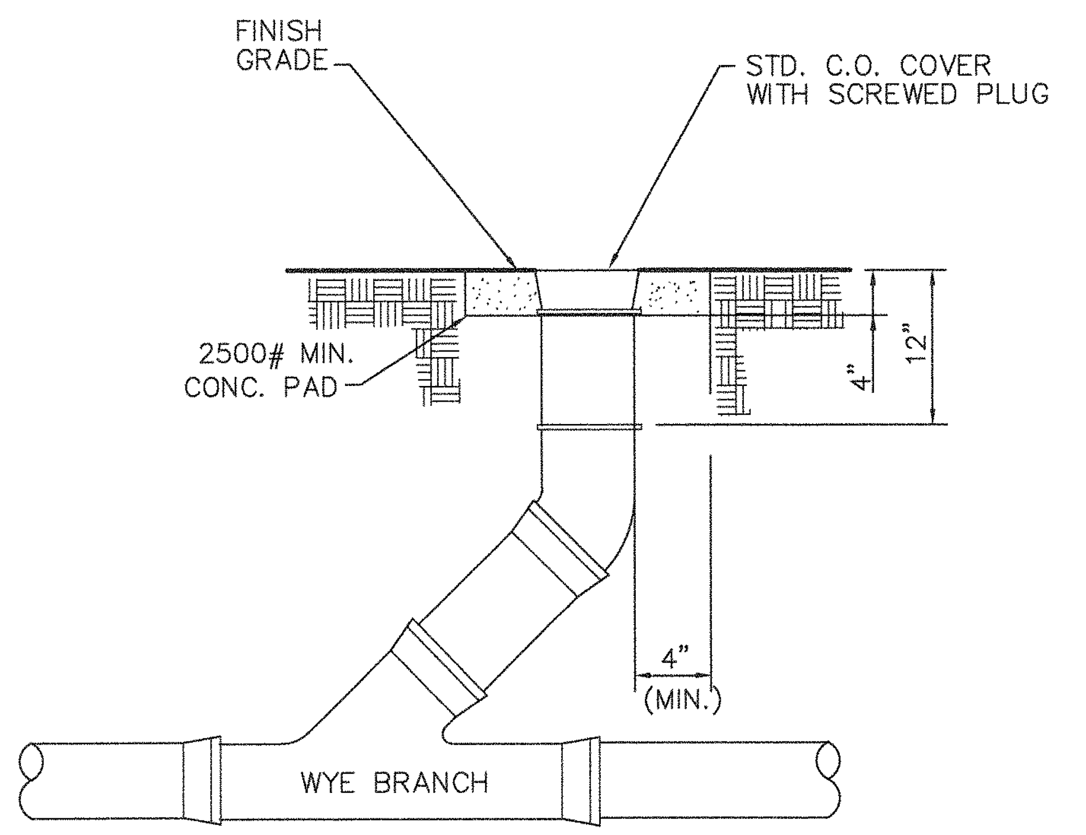

STORM SEWER CLEANOUT (1)

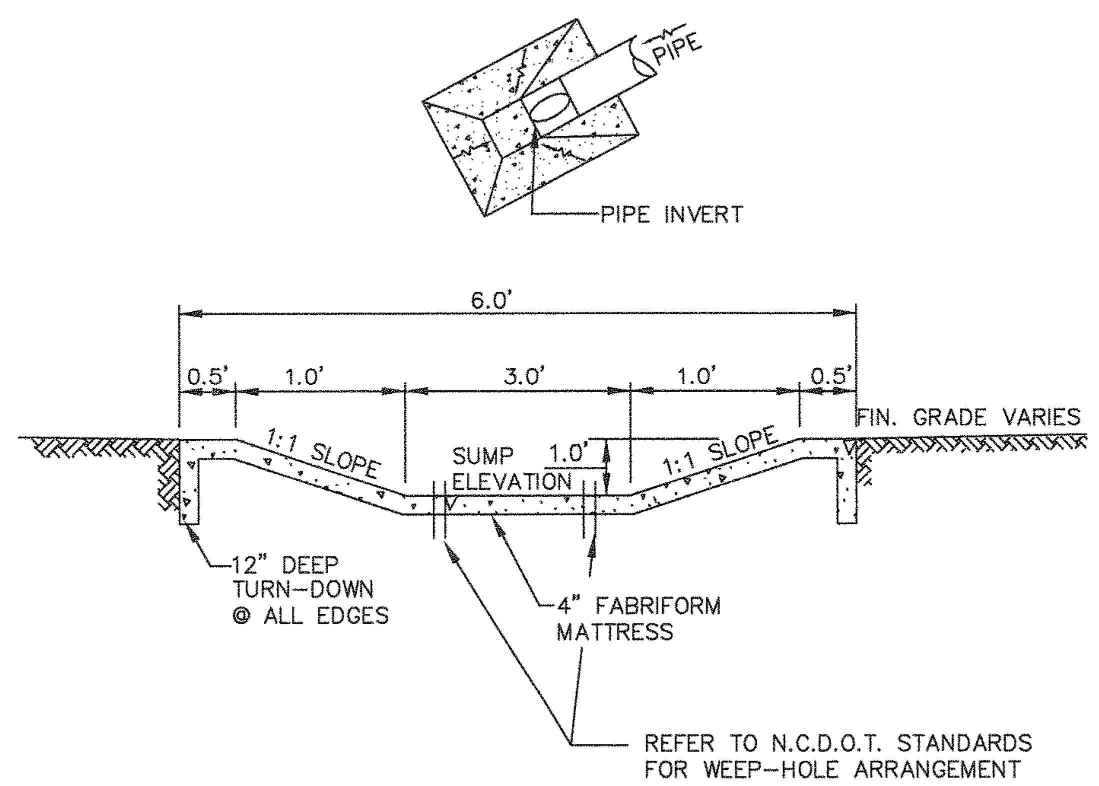

NOTES:
1. SUMP ELEVATION EQUALS PIPE ELEVATION WHIC IS ONE FOOT BELOW FINASH GRADE ELEVATION. SEE STORM STRUCTURE TABLE ON SHEET C-130 FOR M.E.S. INVERTS.
2. THIS IS AN APPROVED EQUAL TO THE USE OF SCOUR STOP STORMWATER TREATMENT.

CONCRETE SUMP AT MITERED END SECTION (2)

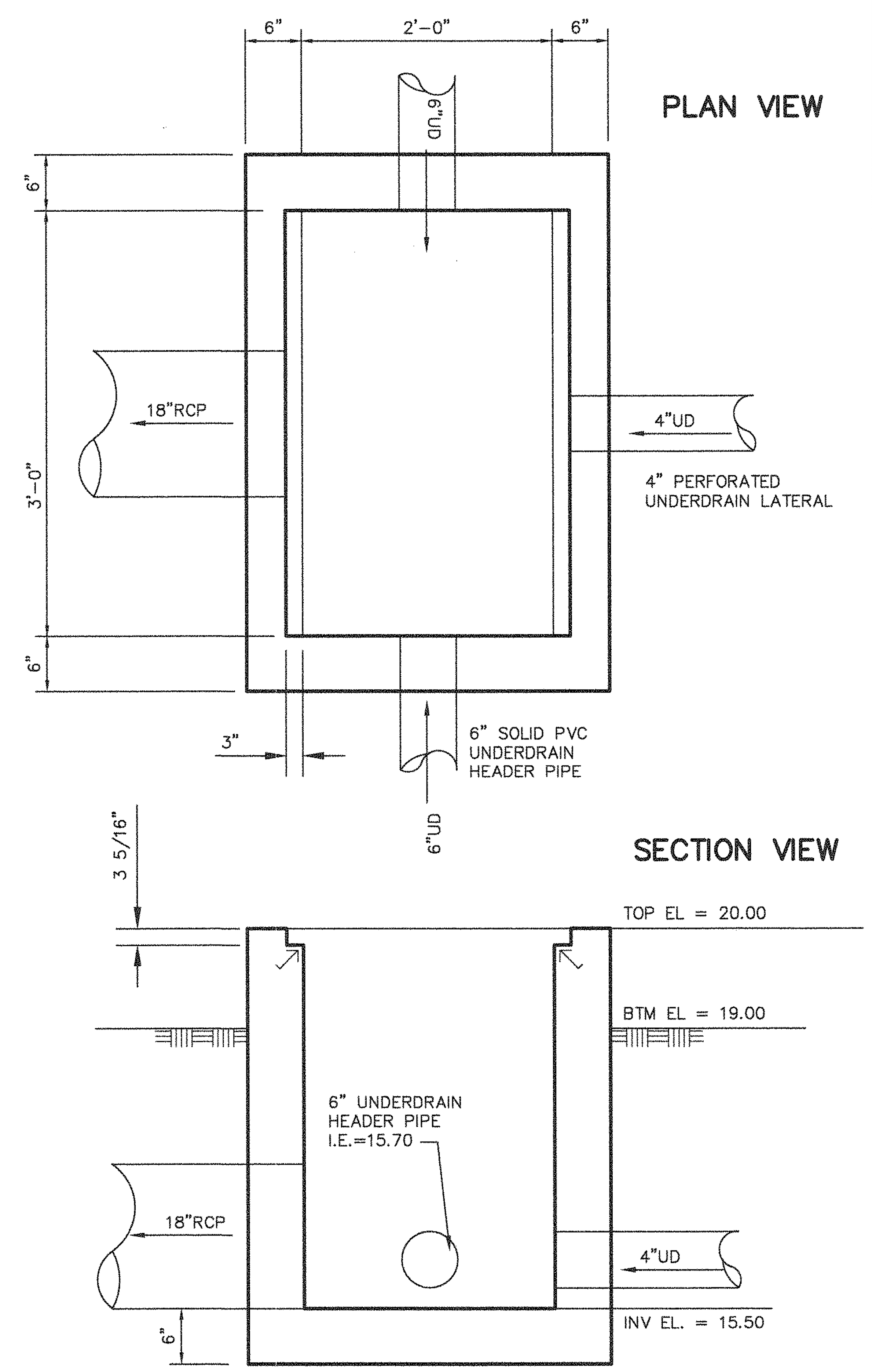

NOTES:
US FOUNDRY HS-20 TRAFFIC RATED GRATE #6631 (TRAFFIC RATED) NOT SHOWN FOR CLARITY
4,000 PSI TYPE II CEMENT
WALL REINFORCING: PER MANUFACTURERS RECOMMENDATION

MODIFIED 2' X 3' INLET

OVERFLOW STRUCTURE (BCELL1) (3)

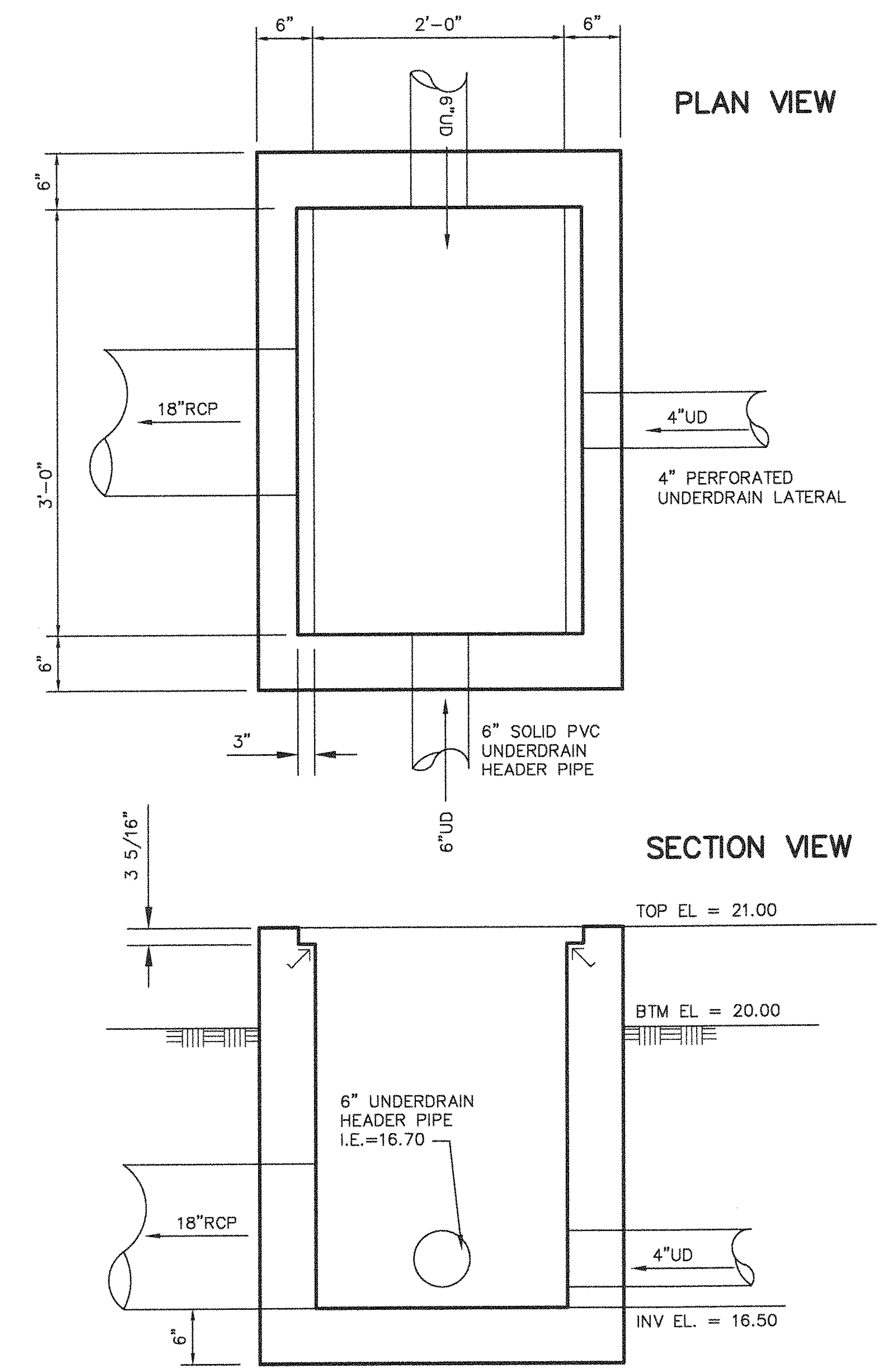

NOTES:
US FOUNDRY HS-20 TRAFFIC RATED GRATE #6631 (TRAFFIC RATED) NOT SHOWN FOR CLARITY
4,000 PSI TYPE II CEMENT
WALL REINFORCING: PER MANUFACTURERS RECOMMENDATION

MODIFIED 2' X 3' INLET

OVERFLOW STRUCTURE (BCELL2) (4)

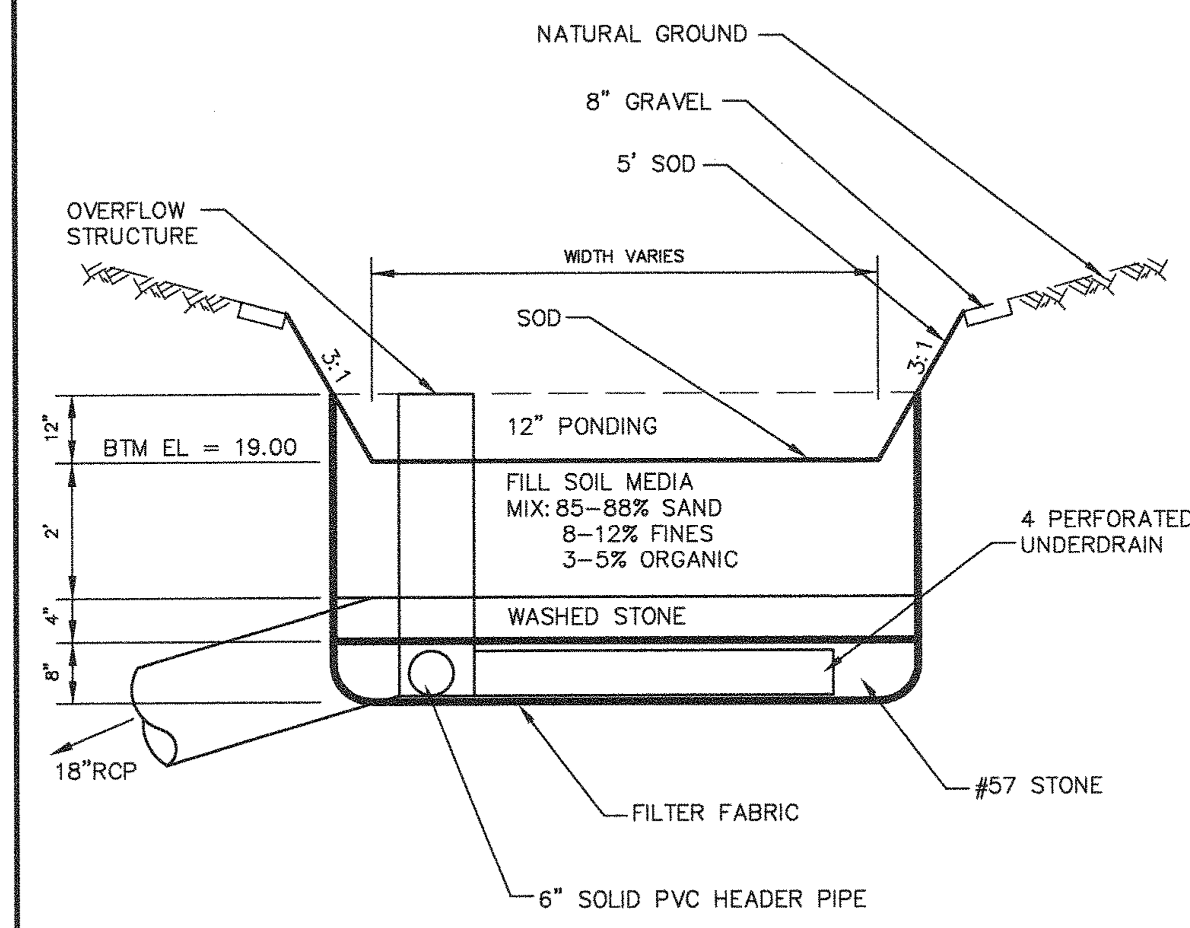

NOTE: CONTRACTOR SHALL WATER SOD UNTIL IT IS PERMANENTLY ESTABLISHED.

BIORETENTION TYPICAL CROSS-SECTION (BCELL1) (5)

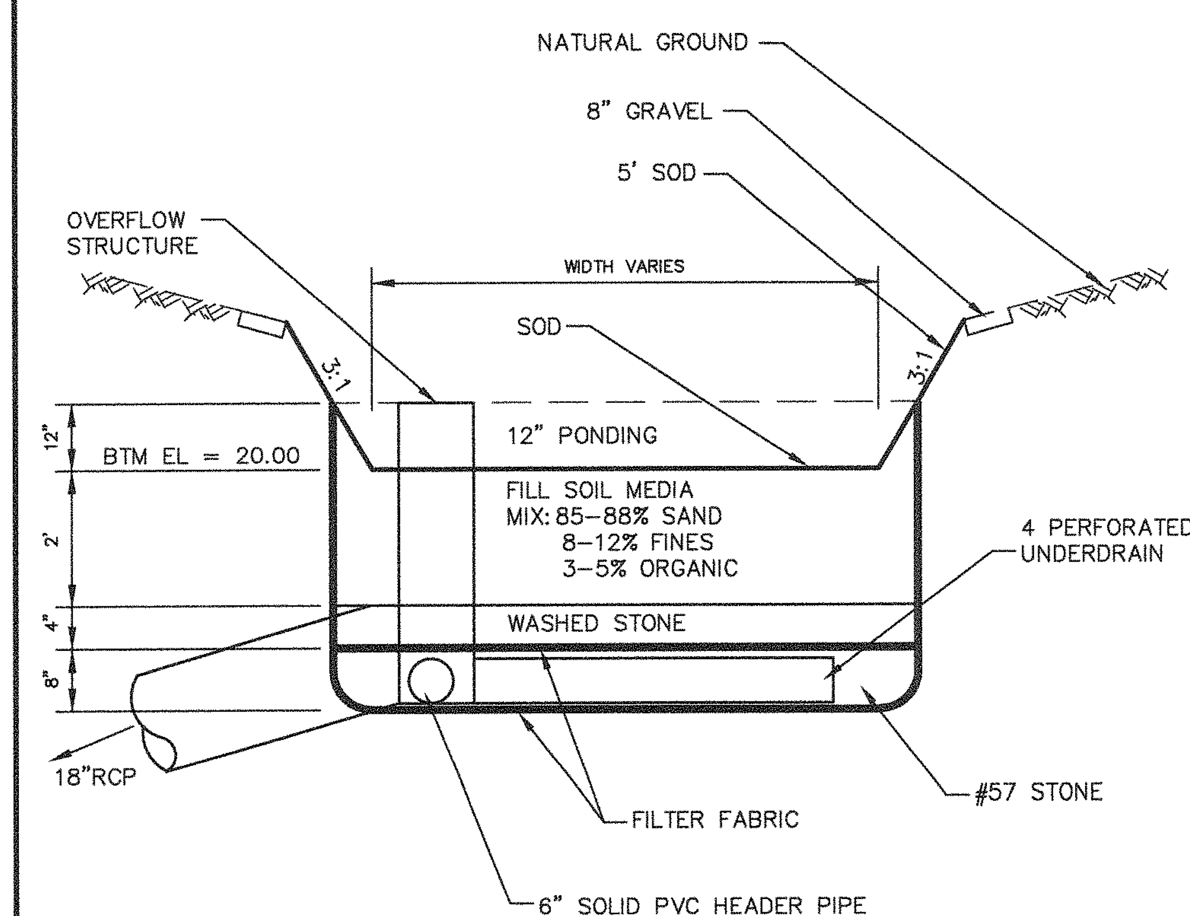

NOTE: CONTRACTOR SHALL WATER SOD UNTIL IT IS PERMANENTLY ESTABLISHED.

BIORETENTION TYPICAL CROSS-SECTION (BCELL2) (6)

X (7)

X (8)

X (9)

X (10)

HASKELL ARCHITECTS and ENGINEERS, P.A.
NORTH CAROLINA – Architecture # 51202, Engineering # C-2136
HASKELL
The Haskell Company
111 Riverside Avenue
Jacksonville, Florida 32202
Phone # (904) 791-4500

MARINE CORPS AIR STATION CHERRY POINT

RECREATIONAL VEHICLE PARK

CHERRY POINT, NORTH CAROLINA

DATE	ISSUE/REVISION
06/11/12	FINAL CDs
06/04/12	CI
04/09/12	OPT.2_95%
3/26/12	CPI 3
12/2/11	CPI 2
10/19/11	EAD 2

We hereby expressly reserve the property rights to this drawing and it is not to be reproduced, copied in any format or manner whatsoever without first obtaining our express written permission and consent.

DRAWN BY: TML
CHECKED BY: TML

AE JOB NUMBER 6601490

GRADING AND DRAINAGE DETAILS

C-531
SHEET NUMBER

Temporary Seeding Recommendations:

Late Winter and Early Spring

Seeding Mixture

Species	Rate (lb/acre)
Rye (grain)	120
Annual lespedeza (Kobe in Peidmont and Coastal Plain, Korean in Mountains)	50

Omit annual lespedeza when duration of temporary cover is not to extend beyond June.

Seeding Dates:

Montains - Above 2,500 feet:	Feb. 15 - May 15
Below 2,500 feet:	Feb. 01 - May 01
Piedmont:	Jan. 01 - May 01
Coastal Plain:	Dec. 01 - Apr. 15

Soil Amendments: Follow recommendations of soil tests or apply 2,000 lb/acre ground agricultural limestone and 750 lb/acre 10-10-10 fertilizer.

Mulch: Apply 4,000 lb/acre straw. Anchor straw by tacking with asphalt, netting, or a mulch anchoring tool. A disk with blades set nearly straight can be used as a mulch anchoring tool.

Maintenance: Refertilize if growth is not fully adequate. Reseed, refertilize and mulch immediately following erosion or other damage.

Summer

Seeding Mixture

Species	**Rate (lb/acre)**
German millet	40

In the Piedmont and Mountains, a small-stemmed Sudangrass may be substituted at a rate of 50 lb/acre.

Seeding Dates:

Montains:	May 15 - Aug. 15
Piedmont:	May 01 - Aug. 15
Coastal Plain:	Apr. 15 - Aug. 15

Soil Amendments: Follow recommendations of soil tests or apply 2,000 lb/acre ground agricultural limestone and 750 lb/acre 10-10-10 fertilizer.

Mulch: Apply 4,000 lb/acre straw. Anchor straw by tacking with asphalt, netting, or a mulch anchoring tool. A disk with blades set nearly straight can be used as a mulch anchoring tool.

Maintenance: Refertilize if growth is not fully adequate. Reseed, refertilize and mulch immediately following erosion or other damage.

Fall

Seeding Mixture

Species	**Rate (lb/acre)**
Rye (grain)	120

Seeding Dates:

Montains:	Aug. 15 - Dec. 15
Piedmont:	Aug. 15 - Dec. 30
Coastal Plain:	Aug. 15 - Dec. 30

Soil Amendments: Follow recommendations of soil tests or apply 2,000 lb/acre ground agricultural limestone and 1,000 lb/acre 10-10-10 fertilizer.

Mulch: Apply 4,000 lb/acre straw. Anchor straw by tacking with asphalt, netting, or a mulch anchoring tool. A disk with blades set nearly straight can be used as a mulch anchoring tool.

Maintenance: Repair and fertilize damaged areas immediately. Topdress with 50 lb/acre of nitrogen in March. If it is necessary to extend temporary cover beyond June 15, overseed with 50 lb/acre Kobe (Piedmont and Coastal Plain) or Korean lespedeza (Mountains) in late February or early March

TEMPORARY SEEDING RECOMMENDATIONS (1)

Permanent Seeding Recommendations:

Project Region: Lower Coastal Plain

Site Characteristics and applicable seeding numbers:	Seeding Number
A. Well to Poorly-Drained Soils with Good Water Holding Capacities, Low Maintenance	1CP
D. Grass-Lined Channels	7CP

Seeding Number	Seeding Mixture Species[1]	Rate (lb/acre)
1CP	Tall fescue	80
	Pensacola Bahiagrass	50
	Sericea lespedeza	30
	Kobe lespedeza	10

Seeding Notes:
(1) From Sep. 01 - Mar. 01 use unscarified sericea seed.
(2) On poorly drained sites, omit sericea and increase Kobe to 30 lb/acre.
(3) Where a neat appearance is desired, omit sericea and increase Kobe to 40 lb/acre.
(4) See Sheet L-110 for locations of permanent sod. Seeding shall be applied in all other disturbed areas except in swales and bioretention cells.

Seeding Dates:	Best	Possible
Early Spring:	Feb. 15 - Mar. 20	Feb. 15 - Apr. 30
Fall:	Sep. 01 - Sep. 30	Sep. 01 - Oct. 31

Nurse Plants:
(1) Between Apr. 15 and Aug. 15, add 10 lb/ace German millet or 15 lb/acre Sudangrass.
(2) Prior to May 01 or after Aug. 15, add 25 lb/acre rye (grain).

Soil Amendments: Apply lime and fertilizer according to soil tests or apply 3,000 - 5,000 lb/acre ground agricultural limestone (use the lower rate on sandy soils) and 1,000 lb/acre 10-10-10 fertilizer.

Mulch: Apply 4,000 lb/acre grain straw or equivalent cover of another suitable mulching material. Anchor mulch by tacking, netting, roving, or by crimping with a mulch anchoring tool. A disk with blades set nearly straight can be used as a mulch anchoring tool.

Maintenance: If growth is less than fully adequate, refertilize in the second year, according to soil tests or topdress with 500 lb/acre 10-10-10 fertilizer. Mow as needed when sericea is omitted from the mixture. Reseed, fertilize, and mulch damaged areas immediately.

Seeding Number		Seeding Mixture Species[1]	Rate (lb/acre)	Seeding Dates:
7CP	Grass-lined Channels; Coastal Plain, Lower Piedmont, and Dry Soils in the Central Piedmont.	Common Bermudagrass	40 - 80 (1 - 2 lb / 1,000 sf)	Coastal Plain: Apr. - Jul. Piedmont: Apr. 15 - Jun. 30

Soil Amendments: Apply lime and fertilizer according to soil tests, or apply 3000 lb/acre ground agricultural limestone and 500 lb/acre 10-10-10 fertilizer.

Mulch: Use a rolled erosion control product to cover the bottom of channels and ditches. The lining should extend above the highest calculated depth of flow. On channel side slopes above this height and in drainageways not requiring temporary linings, apply 4,000 lb/acre grain straw, and anchor straw by stapling netting over the top. Mulch and anchoring materials must not be allowed to wash down slopes where they can clog drainage devices.

Maintenance: Seeded areas shall be stabilized within 7 calendar days. Inspect and repair mulch frequently. Refertilize the following Apr. with 50 lb/acre nitrogen.

PERMANENT SEEDING RECOMMENDATIONS (2)

X (3)

[X] Sediment Fence (Silt Fence)

A temporary sediment barrier consisting of a synthetic filter fabric stretched across and attached to supporting posts and entrenched into the ground surface. Use below disturbed areas subject to sheet and rill erosion with the following limitations:

Guidelines: (1) Ensure that the drainage area is no greater than 1/4 acre per 100 feet of fence. This is the maximum drainage area when the slope is less than 2 percent. Where all the runoff is to be stored behind the fence, ensure that the maximum slope length behind a sediment fence does not exceed the following:

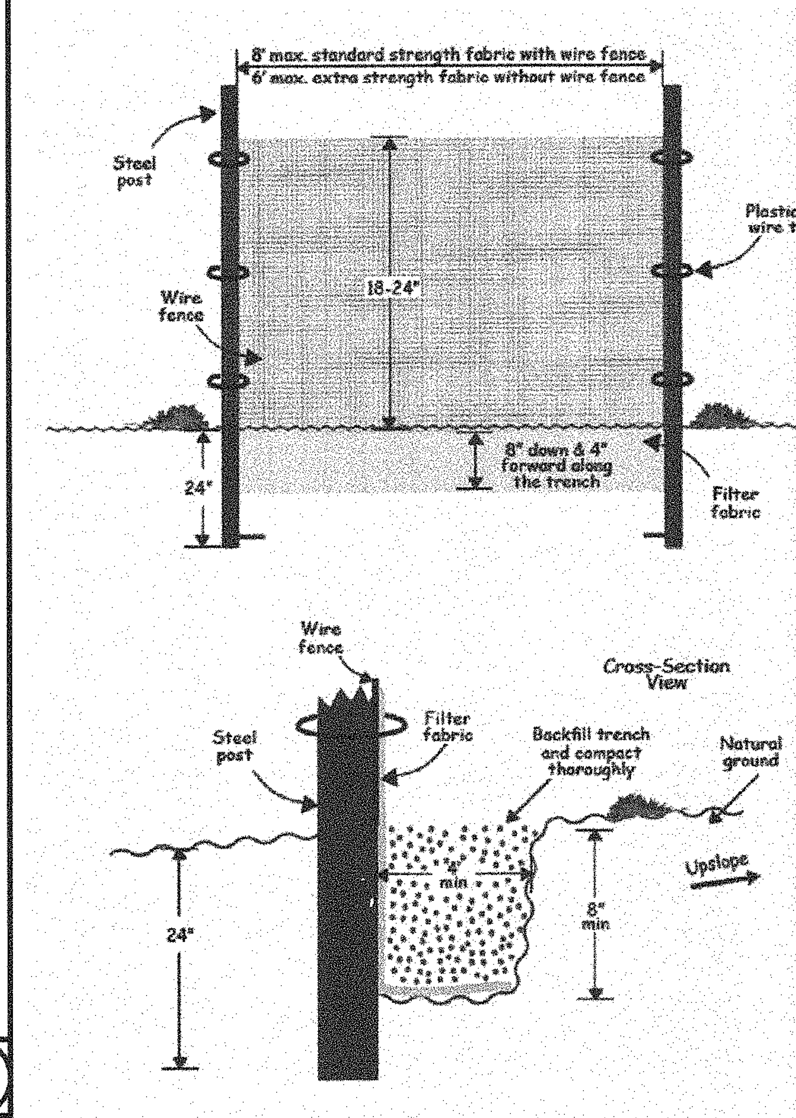

Installation detail of a sediment fence.

Maximum Slope Length and Slope for which Sediment Fence is Applicable

Slope	Slope Length (ft)	Area (sf)	Area (acres)
< 2%	100	10,000	0.23
2 to 5%	75	7,500	0.17
5 to 10%	50	5,000	0.11
10 to 20%	25	2,500	0.06
> 20%	15	1,500	0.03

Constructed Slope		Equivalent Angle from Horizontal
1:1	=	45°
2:1	=	26.6°
3:1	=	18.4°
4:1	=	14.0°
6:1	=	9.5°
8:1	=	7.1°
10:1	=	5.7°
12:1	=	4.8°

Construction Specifications:
(1) Use a synthetic filter fabric of at least 95% by weight polyolefins or polyester, which is certified by the manufacturer or supplier as conforming to the requirements in ASTM D 6461.
(2) Ensure that posts for sediment fences are 1.33 lb/linear ft steel with a minimum length of 5 feet. Make sure steel posts have projections to facilitate fastening the fabric.
(3) For reinforcement of standard strength filter fabric, use wire fence with a minimum 14 gauge and a maximum mesh spacing of 6 inches.
(4) Construct the sediment barrier of standard strength or extra strength synthetic filter fabrics.
(5) Ensure that the height of the sediment fence does not exceed 24 inches above the ground surface.
(6) Construct the filter fabric from a continuous roll cut to the length of the barrier to avoid joints. When joints are necessary, securely fasten the filter cloth only at a support post with 4 feet minimum overlap to the next post.
(7) Support standard strength filter fabric by wire mesh fastened securely to the upslope side of the posts. Extend the wire mesh support to the bottom of the trench. Fasten the wire reinforcement, then fabric on the upslope side of the fence post. Wire or plastic zip ties should have a minimum 50 lb tensile strength.
(8) When a wire mesh support fence is used, space posts a maximum of 8 feet apart. Support posts should be driven securely into the ground a minimum of 24 inches.
(9) Extra strength filter fabric with 6 feet post spacing does not require wire mesh support fence. Securely fasten the filter fabric directly to posts. Wire or plastic zip ties should have a minimum 50 lb. tensile strength.
(10) Excavate a trench approximately 4 inches wide and 8 inches deep along the proposed line of posts and upslope from the barrier (see figure).
(11) Place 12 inches of the fabric along the bottom and side of the trench.
(12) Backfill the trench with soil placed over the filter fabric and compact. Thorough compaction of the backfill is critical to silt fence performance.
(13) Do not attach filter fabric to existing trees.

Maintenance:
(1) Inspect sediment fences at least once a week and after each rainfall. Make any required repairs immediately.
(2) Should the fabric of a sediment fence collapse, tear, decompose, or become ineffective, replace it promptly.
(3) Remove sediment deposits as necessary to provide adequate storage volume for the next rain and to reduce pressure on the fence. Take care to avoid undermining the fence during cleanout.
(4) Remove all fencing materials and unstable sediment deposits and bring the area to grade and stabilize the area after the contributing drainage area has been properly stabilized.

SILT FENCE (SF) (7)

[X] Mulching

To be used in all seeding applications - temporary or permanent.

Application of a protective blanket of straw or other plant residue, gravel, or synthetic material to the soil surface to protect the surface from the forces of raindrop impact and overland flow. Mulch fosters the growth of vegetation, reduces evaporation, insulates the soil, and suppresses weed growth.

* Mulch temporary or permanent seedings immediately.
* Areas that cannot be seeded because of the season should be mulched to provide temporary protection of the soil surface.

Before mulching, complete the required grading and installation of sediment control practices, and prepare the seedbed. Apply seed before mulching except were seed is applied as part of a hydroseeder slurry containing wood fiber mulch or a hydroseeder slurry is applied over straw.

Application of Organic Mulch:
* Organic mulches are effective where they can be tacked securely to the surface.
* Spread mulch uniformly by hand or with a mulch blower.
* After spreading mulch, no more than 25% of ground surface should be visible.

In hydroseeding operations, a green dye, added to the slurry, assures a uniform application.

Anchoring Organic Mulch:
* Straw mulch must be anchored immediately after spreading
* Anchor mulch by use of the following:
  (1) Mulch anchoring tool: A tractor-drawn implement designed to punch mulch into the soil. This method is limited to slopes no steeper than 3:1, where equipment can operate safely on the contour.
  (2) Liquid mulch binders: Application of liquid mulch binders and tackifiers should be heaviest at the edges of areas and at crests of ridges and banks, to resist wind. Binder should be applied uniformly to the rest of the area. Binders may be applied after the mulch is spread or sprayed into the mulch as it is being blown onto the soil. Liquid binders include emulsified asphalt and and array of commercially available synthetic binders.
  (3) Mulch nettings: Lightweight plastic, cotton, ute, wire, or paper nets may be stapled over the mulch according to the manufacturer's recommendations.

Nets and Mats:
* Nets are to be used in conjunction with an organic mulch such as straw.
* Mats, including "excelsior" (wood fiber) blankets, are considered protective mulches and may be used alone, on erodible soils, and during all times of the year. Place matting in firm contact with the soil and staple securely as specified by manufacturer.

Mulching Materials and Application Rates:

Organic Mulches	Rate (per acre)	Units	Quality	Notes
Straw	1 - 2	Tons	Dry unchopped, unweathered; Avoid weeds.	Should come from wheat or oats; spread by hand or machine; must be tacked down.
Wood Chips	5 - 6	Tons	Air Dry	Treat with 12 lbs. nitrogen/ton. Apply with mulch blower, chip handler, or by hand. Not for use in fine turf.
Wood Fiber	0.5 - 1	Tons		Also referred to as wood cellulose. May be hydroseeded. Do not use in hot, dry weather.
Bark	35	Cu.Yds.	Air dry, shredded or hammer-milled, or chips	Apply with mulch blower, chip handler, or by hand. Do not use asphalt tack.
Corn Stalks	4 - 6	Tons	Cut or shredded in 4 - 6 inch lengths.	Apply with mulch blower or by hand. Not for use in fine turf.
Sericea lespedeza seed-bearing stems	1 - 3	Tons	Green or dry; should contain mature seed.	
Nets and Mats				
Jute Net	Cover Area		Heavy, uniform; woven of single jute yarn.	Withstands waterflow. Best when used with organic mulch.
Fiberglass Net	Cover Area			Withstands waterflow. Best when used with organic mulch.
Excelsior Mat (wood fiber)	Cover Area			

MULCHING (4)

[X] Sodding

Reference Sheets C-160 & C-161 "Erosion and Sediment Control Plan", as well as Sheet L-110 "Landscape Plan" for areas to receive this type of stabilization.

Normally a permanent stabilization practice, sod may also be used as a temporary stabilization practice where immediate vegetative cover is necessary or where establishment of vegetative cover in a critical area by seed is not possible. Locations particularly suited to stabilization by sod include waterways and open channels carrying flow only during storm events; areas around drop inlets (when the drainage area has been stabilized); and steep critical areas.

Choose appropriate types of sod for the site and the intended purpose.

Use only high-quality sod of known genetic origin, free of noxious weeds, disease, and insect problems. It should appear healthy and vigourous, and conform to the following specifications:

* Sod should be machine cut at a uniform depth of 1/2 - 2 inches (excluding shoot growth and thatch).
* Sod should not have been cut in excessively wet or dry weather.
* Sections of sod should be a standard size as determined by the supplier, uniform, and untom.
* Sections of sod should be strong enough to support their own weight, and retain their size and shape when lifted by one end.
* Harvest, delivery, and installation of sod should take place within a period of 36 hours.
* Sod must not be grown in soil with an impermeable (clay) or muck layer.

Soil Preparation:
(1) Test soil to determine exact requirements for lime and fertilizer. Where sodding must be planned without soil tests, the following soil amendments may be sufficient.
  * Pulverized agricultural limestone at a rate of 2 tons / acre (100 lb / 1,000 sf)
  * Fertilzer at a rate of 1,000 lb / acre (25 lb / 1,000 sf) of 10-10-10 in fall or 5-10-10 in spring.
  Amendments should be spread evenly over the area, and incorporated into the top 4 - 8 inches of soil by disking, harrowing, or other effective means.
(2) Prior to laying sod, clear the soil surface of trash, debris, roots, branches, stones, and clods larger than 2 inches in diameter. To avoid standing water, fill or level low spots. Rake or harrow the site to achieve a smooth and level final grade.
(3) Complete soil preparation by rolling or cultipacking to firm the soil. Avoid using heavy equipment on the area, particularly when the soil is wet, as this may cause excessive compaction, and make it difficult for the sod to take root.

Sod Installation:
(1) Moistening the sod after it is unrolled and store sod in the shade during installatioin.
(2) Rake the soil surface to break the crust just before laying the sod. During the summer, lightly irrigate the soil, immediately before laying the sod to cool the soil, reduce root burning, and dieback.
(3) Do not sod on gravel, frozen soils, or soils that have been treated recently with sterilants or herbicides.
(4) Lay the first row of sod in a straight line with subsequent rows placed parallel to and butting tightly against each other. Stagger strips in a bick-like pattem. Be sure that the sod is not streached or overlapped and that all joints are butted tightly to prevent voids. Use a knife or sharp spade to trim and fit irregularly shaped areas.
(5) Install strips of sod with their longest dimension perpendicular to the slope. On slopes 3:1 or greater, or where erosion may be a problem, secure sod with pegs or staples.
(6) As sodding of clearlydefined areas is completed, roll sod to provide firm contact between roots and soil.
(7) After rolling, irrigate until the soil is wet 4 inches below the sod.
(8) Keep sodded areas moist to a depth of 4 inches until the grass takes root.
(9) Mowing should no be attempted until the sod is firmly rooted (usually 2 - 3 weeks).

Maintenance:
* After the first week water as necessary to maintain adequate moisture in the root zone and prevent dormancy.
* Do not remove more than 1/3 of the shoot in any mowing. Grass height should be maintained at 2 - 3 inches.
* After the first growing season, established sod requires fertilization, and may also require lime.

SODDING (5)

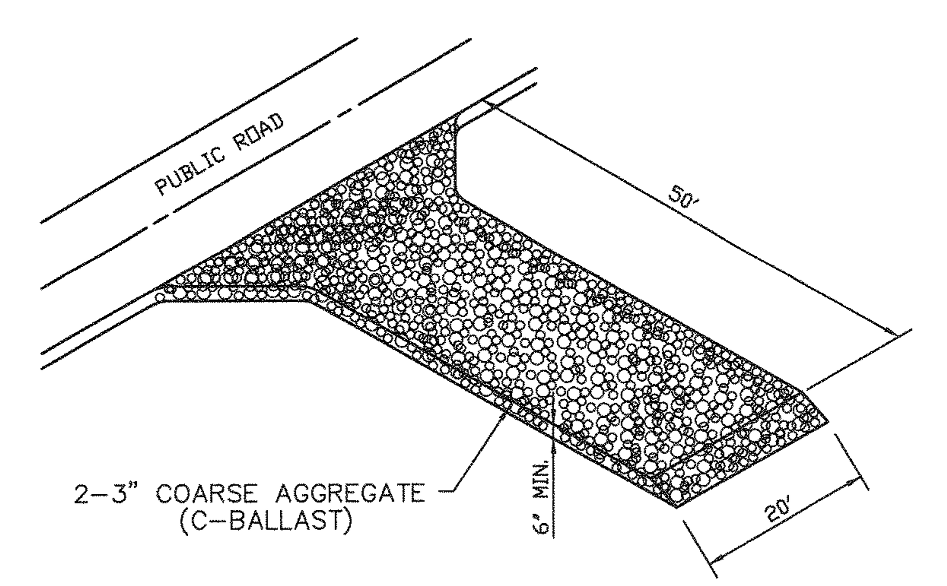

STABILIZED GRAVEL ENTRANCE (CE) (8)

MYRA W. JONES, P.E.
CIVIL ENGINEER
REG. NO. 031309

HASKELL ARCHITECTS and ENGINEERS, P.A.
NORTH CAROLINA — Architecture # 51202, Engineering # C–2136
HASKELL
The Haskell Company
111 Riverside Avenue
Jacksonville, Florida 32202
Phone # (904) 791-4500

MARINE CORPS AIR STATION CHERRY POINT
RECREATIONAL VEHICLE PARK
CHERRY POINT, NORTH CAROLINA

DATE	ISSUE/REVISION
06/11/12	FINAL CDs
06/04/12	CI
04/09/12	OPT.2_95%
3/26/12	CPI 3
12/2/11	CPI 2
10/19/11	EAD 2
9/8/11	CPI
8/29/11	RPI
7/29/11	EAD REVIEW
7/14/11	QDP

We hereby expressly reserve the property rights to this drawing and it is not to be reproduced, copied in any format or manner whatsoever without first obtaining our express written permission and consent.

DRAWN BY: TML CHECKED BY: TML

AE JOB NUMBER 6601490

EROSION AND SEDIMENT CONTROL DETAILS

C-540
SHEET NUMBER

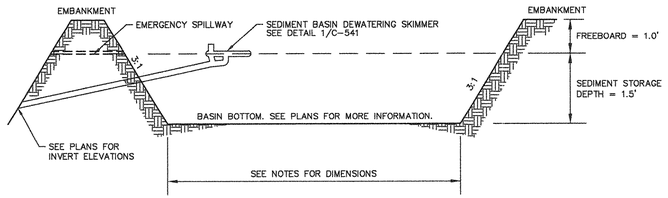

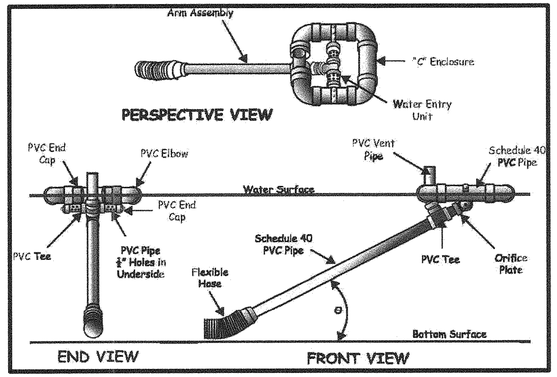

DESIGN NOTES:
1. 3 BAFFLES REQUIRED EACH BASIN (NOT SHOWN.)
2. CONSTRUCT 2'X2' CONCRETE PAD AT OUTLET END OF EACH SKIMMER PIPE AS OUTLET PROTECTION MEASURE.

FOR SB 1:
1. SKIMMER SIZE SHALL BE 1.5" WITH A 2" DIAMETER PIPE FOR A DEWATERING TIME OF 2 DAYS.
2. DESIGNED BASIN BOTTOM SURFACE AREA IS 4,500 SF. SHEET C-160 DISPLAYS DIMENSIONS OF 45'X100'. DIMENSIONS CAN BE FIELD ADJUSTED TO MEET TOPOGRAPHY AS LONG AS SURFACE AREA AND STORAGE VOLUME REQUIREMENTS ARE MET.

FOR SB 2:
1. SKIMMER SIZE SHALL BE 1.5" WITH A 1.5" DIAMETER PIPE FOR A DEWATERING TIME OF 2.5 DAYS.
2. DESIGNED BASIN BOTTOM SURFACE AREA IS 3,200 SF. SHEET C-160 DISPLAYS DIMENSIONS OF 40'X80'. DIMENSIONS CAN BE FIELD ADJUSTED TO MEET TOPOGRAPHY AS LONG AS SURFACE AREA AND STORAGE VOLUME REQUIREMENTS ARE MET.

SKIMMER DETAIL FOR SEDIMENT BASIN (1)

[X] Check Dam

Definition: A small temporary stone dam constructed across a drainage way.

Purpose: To reduce erosion in a drainage channel by reducing the velocity of flow.

Application: This practice may be used as a temporary measure to limit erosion by reducing velocity in small open channels. When needed, they can be used in channels, roadside ditches, and temporary diversions.

* Reduce velocity in small temporary channels that are degrading, but where permanent stabilization is impractical due to their shor period of usefulness;
* Reduce velocity in small eroding channels where construction delays or weather conditions prevent timely installation of nonerosive liners.
* Do not use check dams in intermittent or perennial streams.

Design:
* Limit drainage area to 1/2 acre.
* Keep maximum height of 2 feet at center of the dam.
* Keep the center of the check dam at least 9 inches lower than the outer edges at natual ground level.
* Keep the side slopes of the dam at 2:1 or flatter.
* Ensure that the maximum spacing between dams places the toe of the upstream dam at the same elevation as the top of the downstream dam.
* Stabilize outflow areas along the channel to resist erosion.
* Use NCDOT Class B stone and line the upstream side of the dam with NCDOT # 5 or # 57 stone.
* Key the stone into the ditch banks and extend it beyond the abutments a minimum of 1.5 feet to avoid washouts from overflow around the dam.

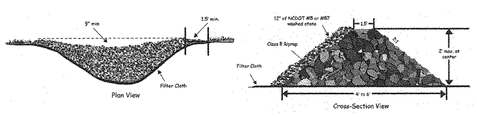

Construction Specifications:
(1) Place stone to the lines and dimensions shown in the plan on a filter fabric foundation.
(2) Keep the center stone section at least 9 inches below natural ground level wher the dam abuts the channel banks.
(3) Extend stone at least 1.5 feet beyond the ditch bank to keep water from cutting around the ends of the dam.
(4) Set spacing between dams to assure that the elevation at the top of the lower dam is the same as the toe elevation of the upper dam.

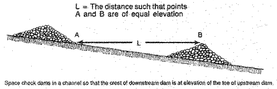

Space check dams in a channel so that the crest of downstream dam is at elevation of the toe of upstream dam.

Continued Next Page

(5) Protect the channel after the lowest check dam from heavy flow that could cause erosion.
(6) Make sure that the channel reach above the most upstream dam is stable.
(7) Ensure that other areas of the channel, such as culvert entrances below the check dams, ar not subject to
(8) damage or blockage from displaced stones.

Maintenance:
(1) Inspect check dams and channels at least weekly and after each significant rainfall event of 1/2 inch or greater. Repair immediately. Clean out sediment, straw, limbs, or other debris that could clog the channel when needed.
(2) Anticipate submergence and deposition above the check dam and erosion from high flows around the edges of the dam. correct all damage immediately. If significant erosion occurs between dams, additional measures can be taken such as, installing a protective riprap liner in that portion of the channel.
(3) Remove sediment accumulated behind the dams as needed to prevent damage to channel vegetation, allow the channel to drain through the stone check dam, and prevent large flows from carrying sediment over the dam. Add stones to dams as needed to maintain design height and cross section.

ROCK CHECK DAM (CD) (4)

[X] Porous Baffles

Porous barriers are to be installed inside all temporary sediment traps and sediment basins to reduce the velocity and turbulence of the water flowing through the measure, and facilitate the settling of sediment from the water before discharge.

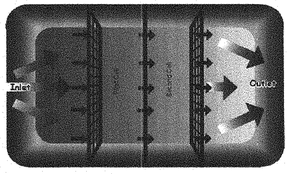

Porous baffles in a sediment basin.

Percent of surface area for each section of the baffle.

* Inlet Zone: 35%
* First Cell: 25%
* Second Cell: 25%
* Outlet Zone: 15%

Basins less than 20 feet in length may use 2 baffles that divide the basin into thirds.

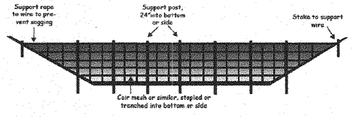

Cross-section of a porous baffle in a sediment basin.

Installation of baffles are similar to the installation of sediment fence. Materials such as 700 g/m2 coir erosion blanket, coir mesh, or tree protection fence folded folded over to reduce pore size have been used successfully.

Construction Specifications:
(1) Grade the basin so that the bottom is level front to back and side to side.
(2) Install posts or saw horses across the width of the sediment trap.
(3) Steel posts should be driven to a depth of 24 inches, spaced at a maximum of 4 feet apart, and installed up the sides of the basin as well. The top of the fabric should be 6 inches higher than the invert of the spillway. Tops of baffles should be 2 inches lower than the top of the berms.
(4) Install at least three rows of baffles between the inlet and outlet discharge point. Basins less than 20 feet in length may use 2 baffles.
(5) When using posts, add a support wire or rope across the top of the measure to prevent sagging.
(6) Wrap porous material, like jute backed by coir material, over a sawhorse or the top wire. Hammer rebar into the sawhorse legs for anchoring. The fabric should have five to ten percent openings in the weave. Attach fabric to a rope and a support structure with zip ties, wire, or staples.
(7) The bottom and sides of the fabric should be anchored in a trench or pinned with 8-inch erosion control matting staples.
(8) Do not splice the fabric, but use a continuous piece across the basin.

Maintenance:
(1) Inspect baffles at least once a week and after each rainfall. Make any required repairs immediately.
(2) Be sure to maintain access to the baffles. Should the fabric of a baffle collapse, tear, decompose, or become ineffective, replace it promptly.
(3) Remove sediment deposits when it reaches half full to provide adequate storage volume for the next rain and to reduce pressure on the baffles. Take care to avoid damaging the baffles during cleanout. Sediment depth should never exceed half the designed storage depth.
(4) After the contributing drainage area has been properly stabilized, remove all baffle materials and unstable sediment deposits, bring the area to grade, and stabilize the area.

POROUS BAFFLES (5)

[X] Skimmer Sediment Basins

Skimmer Sediment Basins will be constructed at locations indicated on the Erosion and Sediment Control Plans. These basins shall consist of ponding area(s) formed by an embankment or excavation to detain sediment-laden runoff from disturbed areas long enough to allow the majority of the sediment to settle out.

Sediment basins, along with other controls such as diversion dikes are intended to be constructed as the workhorse step in any land-disturbing activity that must endure a significant duration of activity.

Design requirements for this control varies with the permitting agency and geographic location within the United States; therefore, the following design requirements apply to this project:

Primary Spillway: Trapezoidal spillway with impermeable membrane

Maximum Drainage Area:	10	acres
Minimum Volume:	1,800	CF per acre of disturbed area.
Minimum Surface Area:	325	SF per cfs inflow
Minimum L/W Ratio:	2	:1
Maximum L/W Ratio:	6	:1
Minimum Depth:	2	ft
Dewatering Mechanism:	Skimmer	
Minimum Dewatering Time:	2	days
Baffles Required:	3	baffles

Construction Specifications:
(1) Site preparations: Clear, grub, and strip topsoil from areas under the embankment to remove trees, vegetation, root mat, and other objectionable material. Remove all surface soil containing high amounts of organic matter and stockpile or dispose of it properly. Haul all objectionable material to the designated disposal area. Place temporary sediment control measures below the basin as needed.
(2) Ensure that fill material for the embankment is free of roots, woody vegetation, organic matter, and other objectionable material. Place the fill in lifts not to exceed 9 inches, and machine compact it. Over fill the embankment 6 inches to allow for settlement.
(3) Shape the basin to the specified dimensions. Prevent the skimming device from settling into the mud by excavating a shallow pit under the skimmer or providing a low support under the skimmer of stone or timber.
(4) Place the barrel (typically 4-inch Schedule 40 PVC pipe) on a firm, smooth foundation of impervious soil. Do not use pervious material such as sand, gravel, or crushed stone as backfill around the pipe. Place the fill material around the pipe spillway in 4-inch layers and compact it under and around the pipe to at least the same density as the adjacent embankment. Care must be taken not to raise the pipe from the firm contact with its foundation when compacting under the pipe haunches.

Place a minimum depth of 2 feet of compacted backfill over the pipe spillway before crossing it with construction equipment. In no case should the pipe conduit be installed by cutting a trench through the dam after the embankment is complete.
(5) Skimmer: Assemble the skimmer per Detail 1 / Sheet C-541 in accordance with the NCDENR Erosion and Sediment Control Planning and Design Manual, Chapter 6.64.
(6) Lay the assembled skimmer on the bottom of the basin with the flexible joint at the inlet of the barrel pipe. Attach the flexible joint to the barrel pipe and position the skimmer over the excavated pit or support. Be sure to attach a rope to the skimmer and anchor it to the side of the basin. This will be used to pull the skimmer to the side for mainenance.
(7) Earthen spillway: Install the spillway in undisturbed soil to the greatest extent possible. The achievement of planned elevations, grade, design width, and entrance and exit channel slopes are critical to the successful operation of the spillway. The spillway should be lined with laminated plastic or impermeable geotextile fabric. The fabric must be wide and long enough to cover the bottom and sides and extend onto the top of the dam for anchoring in a trench. The edges may be secured with 8-inch staples or pins. The fabric must be long enough to extend down the slope and exit onto stable ground. The width of the fabric must be one piece, not jointed or spliced; otherwise water can get under the fabric. If the length of the fabric is insufficient for the entire length of the spillway, multiple sections, spanning the complete width, may be used. The upper section(s) should overlap the lower section(s) so that water cannot flow under the fabric. Secure the upper edge and sides of the fabric in a trench with staples or pins.
(8) Inlets: Discharge water into the basin in a manner to prevent erosion. Utilize the proposed swale grading with outlet protection to divert sediment-laden water to the upper end of the pool area to improve basin efficiency.
(9) Erosion control: Construct the structure so that the disturbed area is minimized. Divert surface water away from bare areas. Complete the embankment before the area is cleared. Stabilize the emergency spillway embankment and all other disturbed areas above the crest of the principal spillway immediately after construction.
(10) Install porous baffles as specified. (see Porous Baffles, Detail 5 / Sheet C-541)
(11) After all the sediment-producing areas have been permanently stabilized, remove all the unstable sediment and immediately begin constructing the permanent bioretention cells in their places, per the grading and drainage plans. Blend the perimeters of the cells with the adjoining areas and stabilize properly.

Maintenance:
(1) Inspect skimmer sediment basins at least weekly and after each significant rainfall event (1/2 inch or greater) and repair immediately.
(2) Remove sediment and restore basin to its original dimensions when sediment accumulates to one-half the design depth. Place removed sediments in an area with sediment controls. Pull the skimmer to one side so that the sediment underneath it can be excavated. Excavate the sediment from the entire basin, not just around the skimmer or one baffle.
(3) Make sure vegetation growing in the bottom of the basin does not hold down the skimmer.
(4) Repair the baffles if they are damaged. Re-anchor the baffles if water is flowing underneath or around them.
(5) Check the fabric lined spillway for damage and make any required repairs with fabric that spans the full width of the spillway. Check the embankment, spillways, and outlet for erosion damage, and inspect the embankment for piping and settlement. Make all necessary repairs immediately.
(6) Remove all trash and other debris from the skimmer and pool area.
(7) Freezing weather can result in ice forming in the basin. Some special precautions should be taken in the winter to prevent the skimmer from plugging with ice.

SKIMMER SEDIMENT BASIN (SB) (3)

HASKELL ARCHITECTS and ENGINEERS, P.A.
NORTH CAROLINA – Architecture # 51202, Engineering # C-2136
HASKELL
The Haskell Company
111 Riverside Avenue
Jacksonville, Florida 32202
Phone # (904) 791-4500

MARINE CORPS AIR STATION CHERRY POINT

RECREATIONAL VEHICLE PARK

CHERRY POINT, NORTH CAROLINA

DATE	ISSUE/REVISION
06/11/12	FINAL CDs
06/04/12	CI
04/09/12	OPT.2_95%
3/26/12	CPI 3
12/2/11	CPI 2
10/19/11	EAD 2
9/8/11	CPI
8/29/11	RPI
7/29/11	EAD REVIEW
7/14/11	QDP

We hereby expressly reserve the property rights to this drawing and it is not to be reproduced, copied in any format or manner whatsoever without first obtaining our express written permission and consent.

DRAWN BY: TML
CHECKED BY: TML

AE JOB NUMBER
6601490

EROSION AND SEDIMENT CONTROL DETAILS

C-541
SHEET NUMBER

STORMWATER POLLUTION PREVENTION PLAN

SITE DESCRIPTION

PROJECT NAME AND LOCATION:
RECREATIONAL VEHICLE PARK
MARINE CORPS AIR STATION
CHERRY POINT, NORTH CAROLINA

OWNER NAME AND ADDRESS:
CDR KEVIN JUNTUNEN
NAVFAC MID-ATLANTIC ROICC
BLDG 163, CURTIS RD, PSC BOX 8006
MCAS CHERRY POINT, NORTH CAROLINA 28533
(252) 466-4762

DESCRIPTION:
THE DEVELOPMENT WILL CONSIST OF CONSTRUCTION OF AN RV PARK WITH NEW ASPHALT PAVEMENT, NEW CONCRETE RV PARKING PADS, TWO SMALL SUPPORT BUILDINGS, A PICNIC SHELTER, NEW UNDERGROUND UTILITIES, AND CONVEYANCE SWALES THAT OUTFALL TO NEW BIORETENTION CELLS.

SOIL DISTURBING ACTIVITIES WILL INCLUDE:
CLEARING AND GRUBBING; EARTHWORK, PAVEMENT AND GRADING;
STORM SEWER AND UTILITIES.

RUNOFF CURVE NUMBERS:
1. PRE-CONSTRUCTION = 72
2. DURING CONSTRUCTION = 70
3. POST-CONSTRUCTION = 77

SOILS:
SEE SOIL BORING REPORT FOR SOILS DATA

SITE MAPS:
* SEE ATTACHED GRADING PLAN FOR PRE & POST DEVELOPMENT GRADES, AREAS OF SOILS, DISTURBANCE, LOCATION OF SURFACE WATERS, WETLANDS, PROTECTED AREAS, MAJOR STRUCTURAL AND NONSTRUCTURAL CONTROLS AND STORM WATER DISCHARGE POINTS.
* SEE ATTACHED EROSION & SEDIMENT CONTROL PLAN FOR LOCATION OF TEMPORARY AND PERMANENT STABILIZATION PRACTICES.
* SEE GENERAL NOTES FOR REQUIRMENTS FOR TEMPORARY AND PERMANENT STABILIZATION.

SITE AREA:
1. TOTAL AREA OF SITE = 22.0 ACRES
2. TOTAL AREA TO BE DISTURBED = 8.11 ACRES

NAME OF RECEIVING WATERS: SLOCUM CREEK IN THE NEUSE RIVER BASIN

CONTROLS

THIS PLAN UTILIZES BEST MANAGEMENT PRACTICES TO CONTROL EROSION AND SEDIMENTATION CAUSED BY STORM WATER RUN OFF. AN EROSION AND SEDIMENT CONTROL PLAN HAS BEEN PREPARED TO INSTRUCT THE CONTRACTOR ON PLACEMENT OF THESE CONTROLS. IT IS THE CONTRACTORS RESPONSIBILITY TO INSTALL AND MAINTAIN THE CONTROLS PER PLAN AS WELL AS ENSURING THE PLAN IS PROVIDING THE PROPER PROTECTION AS REQUIRED BY FEDERAL, STATE AND LOCAL LAWS. REFER TO "CONTRACTORS RESPONSIBILITY" FOR A VERBAL DESCRIPTION OF THE CONTROLS THAT MAY BE IMPLEMENTED.

STORM WATER MANAGEMENT

STORM WATER DRAINAGE WILL BE PROVIDED BY: A PROPOSED SYSTEM OF GRASSED SWALES TO BIORETENTION CELLS TO EXISTING VEGETATIVE BUFFERS FOR THE PROJECT. AREAS WHICH ARE NOT TO BE CONSTRUCTED ON, BUT WILL BE REGRADED SHALL BE STABILIZED IMMEDIATELY AFTER GRADING IS COMPLETE. WHEN CONSTRUCTION IS COMPLETE, A TOTAL OF 0.80 ACRES WILL HAVE BEEN REGRADED. THE SITE DISCHARGES TO SLOCUM CREEK.

GRASSED SWALES AND SKIMMER SEDIMENT BASINS WILL BE USED TO INTERCEPT SEDIMENT BEFORE LEAVING THE SITE.
THIS IS IN ACCORDANCE WITH THE REQUIREMENTS SET FORTH BY THE NORTH CAROLINA DEPARTMENT OF ENVIRONMENTAL AND NATURAL RESOURCES FOR THIS TYPE OF DEVELOPMENT AT THE TIME OF PERMITTING.

TIMING OF CONTROLS/MEASURES

REFER TO "CONTRACTORS RESPONSIBILITY" FOR THE TIMING OF CONTROL/MEASURES.

CERTIFICATION OF COMPLIANCE WITH FEDERAL, STATE AND LOCAL REGULATIONS

IN ACCORDANCE WITH FEDERAL, STATE AND LOCAL LAWS RELATED TO STORM WATER MANAGEMENT AND EROSION AND TURBIDITY CONTROLS, THE FOLLOWING PERMITS HAVE BEEN OBTAINED.

PERMIT #__APPLICATION FILED__

NPDES #__APPLICATION FILED__

POLLUTION PREVENTION PLAN CERTIFICATION

I CERTIFY UNDER PENALTY OF LAW THAT THIS DOCUMENT AND ALL ATTACHMENTS WERE PREPARED UNDER MY DIRECTION OR SUPERVISION IN ACCORDANCE WITH A SYSTEM DESIGNED TO ASSURE THAT QUALIFIED PERSONNEL PROPERLY GATHERED AND EVALUATED THE INFORMATION SUBMITTED. BASED ON MY INQUIRY OF THE PERSON OR PERSONS WHO MANAGE THE SYSTEM, OR THOSE PERSONS DIRECTLY RESPONSIBLE FOR GATHERING THE INFORMATION, THE INFORMATION SUBMITTED IS, TO THE BEST OF MY KNOWLEDGE AND BELIEF, TRUE, ACCURATE, AND COMPLETE. I AM AWARE THAT THERE ARE SIGNIFICANT PENALTIES FOR SUBMITTING FALSE INFORMATION, INCLUDING THE POSSIBILITY OF FINE AND IMPRISONMENT FOR KNOWING VIOLATIONS.

SIGNED: ______________________________
MYRA W. JONES, P.E., LEED AP

DATED: ____________________

GENERAL

THE ONSITE CONTRACTOR SHALL AT A MINIMUM IMPLEMENT THE REQUIREMENTS OUTLINED BELOW AND THOSE MEASURES SHOWN ON THE EROSION AND SEDIMENT CONTROL PLAN. IN ADDITION THE CONTRACTOR SHALL UNDERTAKE ADDITIONAL MEASURES REQUIRED TO BE IN COMPLIANCE WITH APPLICABLE PERMIT CONDITIONS AND STATE WATER QUALITY STANDARDS. DEPENDING ON THE NATURE OF MATERIALS AND METHODS OF CONSTRUCTION THE CONTRACTOR MAY BE REQUIRED TO ADD FLOCCULANTS TO THE RETENTION SYSTEM PRIOR TO PLACING THE SYSTEM INTO OPERATION.

SEQUENCE OF MAJOR ACTIVITIES:

THE ORDER OF ACTIVITIES WILL BE AS FOLLOWS:
1. INSTALL STABILIZED CONSTRUCTION ENTRANCES AND STORM SEWER SIDE DRAN.
2. INSTALL SILT FENCES AND CHECK DAMS, AS REQUIRED.
3. CLEAR, GRUB AND CONSTRUCT PERMANENT SWALES/BERMS AND SKIMMER SEDIMENT BASINS.
4. CONTINUE CLEARING AND GRUBBING.
5. STOCK PILE TOP SOIL, IF REQUIRED.
6. PERFORM PRELIMINARY GRADING ON SITE, AS REQUIRED.
7. STABILIZE DENUDED AREAS AND STOCKPILES WITHIN 7 CALENDAR DAYS.
8. INSTALL UTILITIES.
9. APPLY BASE TO PROJECT.
10. COMPLETE GRADING AND INSTALL PERMANENT SEEDING/SOD AND PLANTING.
11. COMPLETE FINAL PAVING.
12. REMOVE SEDIMENT FROM SKIMMER SEDIMENT BASINS 1 AND 2 AND REMOVE BAFFLES AND SKIMMER DEVICES.
12. RE-CONSTRUCT SKIMMER SEDIMENT BASINS 1 AND 2 TO FINAL BMP'S AS SHOWN ON SHEET C-130.
14. WHEN ALL CONSTRUCTION ACTIVITY IS COMPLETE AND THE SITE IS STABILIZED, RESEED/SOD, AS REQUIRED.

TIMING OF CONTROLS/MEASURES

AS INDICATED IN THE SEQUENCE OF MAJOR ACTIVITIES, THE SILT FENCES, STABILIZED CONSTRUCTION ENTRANCES AND SKIMMER SEDIMENT BASINS WILL BE CONSTRUCTED PRIOR TO CLEARING OR GRADING OF ANY OTHER PORTIONS OF THE SITE. STABILIZATION MEASURES SHALL BE INITIATED AS SOON AS PRACTICAL IN PORTIONS OF THE SITE WHERE CONSTRUCTION ACTIVITIES HAVE TEMPORARILY OR PERMANENTLY CEASED. ONCE CONSTRUCTION ACTIVITY CEASES PERMANENTLY IN AN AREA, THAT AREA WILL BE STABILIZED PERMANENTLY IN ACCORDANCE WITH THE PLANS. GROUNDCOVER WILL BE PROVIDED ON EXPOSED SLOPES WITHIN 7 CALENDAR DAYS FOLLOWING COMPLETION OF ANY PHASE OF GRADING; PERMANENT GROUNDCOVER FOR ALL DISTURBED AREAS ALSO WITHIN 7 CALENDAR DAYS. AFTER THE ENTIRE SITE IS STABILIZED, THE ACCUMULATED SEDIMENT WILL BE REMOVED FROM THE SEDIMENT BASIN AND THE EARTH BERM/SWALES WILL BE REGRADED/REMOVED AND STABILIZED IN ACCORDANCE WITH THE EROSION & SEDIMENT CONTROL PLAN.

CONTROLS

IT IS THE CONTRACTORS RESPONSIBILITY TO IMPLEMENT THE EROSION AND SEDIMENT CONTROLS AS SHOWN ON THE EROSION AND SEDIMENT CONTROL PLAN. IT IS ALSO THE CONTRACTORS RESPONSIBILITY TO ENSURE THESE CONTROLS ARE PROPERLY INSTALLED, MAINTAINED AND FUNCTIONING PROPERLY TO PREVENT TURBID OR POLLUTED WATER FROM LEAVING THE PROJECT SITE. THE CONTRACTOR WILL ADJUST THE EROSION AND SEDIMENT CONTROLS SHOWN ON THE EROSON AND SEDIMENT CONTROL PLAN AND ADD ADDITIONAL CONTROL MEASURES, AS REQUIRED, TO ENSURE THE SITE MEETS ALL FEDERAL, STATE AND LOCAL EROSION AND SEDIMENT CONTROL REQUIREMENTS. THE FOLLOWING BEST MANAGEMENT PRACTICES WILL BE IMPLEMENTED BY THE CONTRACTOR AS REQUIRED BY THE EROSION AND SEDIMENT CONTROL PLAN AND AS REQUIRED TO MEET THE EROSION AND SEDIMENT REQUIREMENTS IMPOSED ON THE PROJECT SITE BY THE REGULATORY AGENCIES.

EROSION AND SEDIMENT CONTROLS
STABILIZATION PRACTICES

1. FILTER FABRIC BARRIER: FILTER FABRIC BARRIERS CAN BE USED BELOW DISTURBED AREAS SUBJECT TO SHEET AND RILL EROSION WITH THE FOLLOWING LIMITATIONS:
   A. WHERE THE MAXIMUM SLOPE BEHIND THE BARRIER IS 33 PERCENT.
   B. IN MINOR SWALES OR DITCH LINES WHERE THE MAXIMUM CONTRIBUTING DRAINAGE AREA IS NO GREATER THAN 2 ACRES. REFER TO THE EROSION CONTROL DETAILS FOR PROPER CONSTRUCTION OF THE FILTER FABRIC BARRIER.
2. STOCKPILING MATERIAL: NO EXCAVATED MATERIAL SHALL BE STOCKPILED IN SUCH A MANNER AS TO DIRECT RUNOFF DIRECTLY OFF THE PROJECT SITE INTO ANY ADJACENT WATER BODY OR STORM WATER COLLECTION FACILITY. ALL STOCKPILED MATERIALS ARE TO BE ON-SITE AND INSIDE ITS OWN LIMITS OF SILT FENCE. ONE OPENING ON THE UPSTREAM SIDE OF THE STOCKPILE MAY BE OPEN TO ALLOW HAUL TRUCK ACCESS.
3. EXPOSED AREA LIMITATION: THE SURFACE AREA OF OPEN, RAW ERODIBLE SOIL EXPOSED BY CLEARING AND GRUBBING OPERATIONS OR EXCAVATION AND FILLING OPERATIONS SHALL BE MINIMIZED.
4. INLET PROTECTION: INLETS AND CATCH BASINS WHICH DISCHARGE DIRECTLY OFF-SITE SHALL BE PROTECTED FROM SEDIMENT-LADEN STORM RUNOFF UNTIL THE COMPLETION OF ALL CONSTRUCTION OPERATIONS THAT MAY CONTRIBUTE SEDIMENT TO THE INLET.
5. DUST CONTROL: AREAS OPENED BY CONSTRUCTION OPERATIONS AND THAT ARE NOT ANTICIPATED TO BE RE-EXCAVATED OR DRESSED AND RECEIVE FINAL TREATMENT WITHIN 30 DAYS SHALL BE STABILIZED.
6. TEMPORARY SEEDING AND MULCHING: IN ADDITION TO PARAGRAPH 5 ABOVE, SLOPES STEEPER THAN 6:1 SHALL ADDITIONALLY RECEIVE MULCHING OF APPROXIMATELY 2 INCHES LOOSE MEASURE OF MULCH MATERIAL CUT INTO THE SOIL OF THE SEEDED AREA ADEQUATE TO PREVENT MOVEMENT OF SEED AND MULCH.
7. TEMPORARY GRASSING: THE SEEDED AND MULCHED AREA(S) SHALL BE ROLLED AND WATERED OR HYDRO-MULCHED OR OTHER SUITABLE METHODS IF REQUIRED TO ASSURE OPTIMUM GROWING CONDITIONS FOR THE ESTABLISHMENT OF A GOOD GRASS COVER. TEMPORARY GRASSING SHALL BE THE SAME MIX & AMOUNT REQUIRED FOR PERMANENT GRASSING IN THE CONTRACT SPECIFICATIONS.
8. TEMPORARY REGRASSING : IF, AFTER 14 DAYS FROM SEEDING, THE TEMPORARY GRASSED AREAS HAVE NOT ATTAINED A MINIMUM OF 75 PERCENT GOOD GRASS COVER, THE AREA WILL BE REWORKED AND ADDITIONAL SEED APPLIED SUFFICIENT TO ESTABLISH THE DESIRED VEGETATIVE COVER.
9. MAINTENANCE: ALL FEATURES OF THE PROJECT DESIGNED AND CONSTRUCTED TO PREVENT EROSION AND SEDIMENT SHALL BE MAINTAINED DURING THE LIFE OF THE CONSTRUCTION SO AS TO FUNCTION AS THEY WERE ORIGINALLY DESIGNED AND CONSTRUCTED.
10. PERMANENT EROSION CONTROL: THE EROSION CONTROL FACILITIES OF THE PROJECT SHOULD BE DESIGNED TO MINIMIZE THE IMPACT ON THE OFF-SITE FACILITIES.

THE 67 CUBIC YARDS OF STORAGE AREA PER ACRE DRAINED DOES NOT APPLY TO FLOWS FROM OFFSITE AREAS AND FLOWS FROM ONSITE AREAS THAT ARE EITHER UNDISTURBED OR HAVE UNDERGONE FINAL STABILIZATION WHERE SUCH FLOWS ARE DIVERTED AROUND BOTH THE DISTURBED AREA AND THE SEDIMENT BASIN. ANY TEMPORARY SEDIMENT BASINS CONSTRUCTED MUST BE BACKFILLED AND COMPACTED IN ACCORDANCE WITH THE SPECIFICATIONS FOR STRUCTURAL FILL. ALL SEDIMENT COLLECTED IN PERMANENT OR TEMPORARY SEDIMENT TRAPS MUST BE REMOVED UPON FINAL STABILIZATION.

OTHER CONTROLS

WASTE DISPOSAL

WASTE MATERIALS

ALL WASTE MATERIALS EXCEPT LAND CLEARING DEBRIS SHALL BE COLLECTED AND STORED IN A SECURELY LIDDED METAL DUMPSTER. THE DUMPSTER WILL MEET ALL LOCAL AND STATE SOLID WASTE MANAGEMENT REGULATIONS. THE DUMPSTER WILL BE EMPTIED AS NEEDED AND THE TRASH WILL BE HAULED TO A STATE APPROVED LANDFILL. ALL PERSONNEL WILL BE INSTRUCTED REGARDING THE CORRECT PROCEDURE FOR WASTE DISPOSAL. NOTICES STATING THESE PRACTICES WILL BE POSTED AT THE CONSTRUCTION SITE BY THE CONSTRUCTION SUPERINTENDENT, THE INDIVIDUAL WHO MANAGES THE DAY-TO-DAY SITE OPERATIONS AND WILL BE RESPONSIBLE FOR SEEING THAT THESE PROCEDURES ARE FOLLOWED.

HAZARDOUS WASTE

ALL HAZARDOUS WASTE MATERIALS WILL BE DISPOSED OF IN THE MANNER SPECIFIED BY LOCAL OR STATE REGULATION OR BY THE MANUFACTURER. SITE PERSONNEL WILL BE INSTRUCTED IN THESE PRACTICES AND THE SITE SUPERINTENDENT, THE INDIVIDUAL WHO MANAGES DAY-TO-DAY SITE OPERATIONS AND WILL BE RESPONSIBLE FOR SEEING THAT THESE PRACTICES ARE FOLLOWED.

SANITARY WASTE

ALL SANITARY WASTE WILL BE COLLECTED FROM THE PORTABLE UNITS AS NEEDED TO PREVENT POSSIBLE SPILLAGE. THE WASTE WILL BE COLLECTED AND DISPOSED OF IN ACCORDANCE WITH STATE AND LOCAL WASTE DISPOSAL REGULATIONS FOR SANITARY SEWER OR SEPTIC SYSTEMS.

OFFSITE VEHICLE TRACKING

STABILIZED CONSTRUCTION ENTRANCES WILL BE PROVIDED TO HELP REDUCE VEHICLE TRACKING OF SEDIMENTS. THE PAVED STREET ADJACENT TO THE SITE ENTRANCE WILL BE SWEPT AS NEEDED TO REMOVE ANY EXCESS MUD, DIRT OR ROCK TRACKED FROM THE SITE. DUMP TRUCKS HAULING MATERIAL FROM THE CONSTRUCTION SITE WILL BE COVERED WITH A TARPAULIN.

INVENTORY FOR POLLUTION PREVENTION PLAN

THE MATERIALS OR SUBSTANCES LISTED BELOW ARE EXPECTED TO BE PRESENT ONSITE DURING CONSTRUCTION:

[X] Concrete	[X] Fertilizers	[X] Wood
[X] Asphalt	[X] Petroleum Based Products	[X] Masonry Blocks
[X] Tar	[X] Cleaning Solvents	[X] Roofing Materials
[X] Detergents	[X] Paints	[X] Metal Studs
[ ] _______	[ ] _______	[ ] _______

SPILL PREVENTION

MATERIAL MANAGEMENT PRACTICES

THE FOLLOWING ARE THE MATERIAL MANAGEMENT PRACTICES THAT WILL BE USED TO REDUCE THE RISK OF SPILLS OR OTHER ACCIDENTAL EXPOSURE OF MATERIALS AND SUBSTANCES TO STORM WATER RUNOFF.

GOOD HOUSEKEEPING

THE FOLLOWING GOOD HOUSEKEEPING PRACTICES WILL BE FOLLOWED ONSITE DURING THE CONSTRUCTION PROJECT.

* AN EFFORT WILL BE MADE TO STORE ONLY ENOUGH PRODUCT REQUIRED TO DO THE JOB.
* ALL MATERIALS STORED ONSITE WILL BE STORED IN A NEAT, ORDERLY MANNER IN THEIR APPROPRIATE CONTAINERS AND, IF POSSIBLE, UNDER A ROOF OR OTHER ENCLOSURE.
* PRODUCTS WILL BE KEPT IN THEIR ORIGINAL CONTAINERS WITH THE ORIGINAL MANUFACTURER'S LABEL.
* SUBSTANCES WILL NOT BE MIXED WITH ONE ANOTHER UNLESS RECOMMENDED BY THE MANUFACTURER.
* WHENEVER POSSIBLE, ALL OF A PRODUCT WILL BE USED UP BEFORE DISPOSING OF THE CONTAINER.
* MANUFACTURER'S RECOMMENDATIONS FOR PROPER USE AND DISPOSAL WILL BE FOLLOWED.
* THE SITE SUPERINTENDENT WILL INSPECT DAILY TO ENSURE MATERIALS ONSITE RECEIVE PROPER USE AND DISPOSAL.

HAZARDOUS PRODUCTS

THESE PRACTICES ARE USED TO REDUCE THE RISKS ASSOCIATED WITH HAZARDOUS MATERIALS.

* PRODUCTS WILL BE KEPT IN ORIGINAL CONTAINERS UNLESS THEY ARE NOT RESEALABLE.
* ORIGINAL LABELS AND MATERIAL SAFETY DATA WILL BE RETAINED; THEY CONTAIN IMPORTANT PRODUCT INFORMATION.
* IF SURPLUS PRODUCT MUST BE DISPOSED OF, MANUFACTURER'S OR LOCAL AND STATE RECOMMENDED METHODS FOR PROPER DISPOSAL WILL BE FOLLOWED.

PRODUCT SPECIFIC PRACTICES
THE FOLLOWING PRODUCT SPECIFIC PRACTICES WILL BE FOLLOWED ONSITE:

PETROLEUM PRODUCTS

ALL ONSITE VEHICLES WILL BE MONITORED FOR LEAKS AND RECEIVE REGULAR PREVENTIVE MAINTENANCE TO REDUCE THE CHANCE OF LEAKAGE. PETROLEUM PRODUCTS WILL BE STORED IN TIGHTLY SEALED CONTAINERS WHICH ARE CLEARLY LABELED. ANY ASPHALT SUBSTANCES USED ONSITE WILL BE APPLIED ACCORDING TO THE MANUFACTURER'S RECOMMENDATIONS.

FERTILIZERS

FERTILIZERS USED WILL BE APPLIED ONLY IN THE MINIMUM AMOUNTS RECOMMENDED BY THE MANUFACTURER. ONCE APPLIED, FERTILIZER WILL BE WORKED INTO THE SOIL TO LIMIT EXPOSURE TO STORM WATER. STORAGE WILL BE IN A COVERED AREA. THE CONTENTS OF ANY PARTIALLY USED BAGS OF FERTILIZER WILL BE TRANSFERRED TO A SEALABLE PLASTIC BIN TO AVOID SPILLS.

PAINTS

ALL CONTAINERS WILL BE TIGHTLY SEALED AND STORED WHEN NOT REQUIRED FOR USE. EXCESS PAINT WILL NOT BE DISCHARGED TO THE STORM SEWER SYSTEM BUT WILL BE PROPERLY DISPOSED OF ACCORDING TO MANUFACTURERS' INSTRUCTIONS OR STATE AND LOCAL REGULATIONS.

CONCRETE TRUCKS

CONCRETE TRUCKS WILL ONLY WASH OUT OR DISCHARGE SURPLUS CONCRETE OR DRUM WASH WATER ON THE SITE, IN A DESIGNATED CONTAINED AREA AND SHALL BE CLEANED DAILY. NO DISCHARGE SHALL BE ALLOWED INTO THE STORMWATER MANAGEMENT SYSTEM.

SPILL CONTROL PRACTICES

IN ADDITION TO THE GOOD HOUSEKEEPING AND MATERIAL MANAGEMENT PRACTICES DISCUSSED IN THE PREVIOUS SECTIONS OF THIS PLAN, THE FOLLOWING PRACTICES WILL BE FOLLOWED FOR SPILL PREVENTION AND CLEANUP:

MANUFACTURERS' RECOMMENDED METHODS FOR SPILL CLEANUP WILL BE CLEARLY POSTED ON SITE AND SITE PERSONNEL WILL BE MADE AWARE OF THE PROCEDURES AND THE LOCATION OF THE INFORMATION AND CLEANUP SUPPLIES.

MATERIALS AND EQUIPMENT NECESSARY FOR SPILL CLEANUP WILL BE KEPT IN THE MATERIAL STORAGE AREA ONSITE. EQUIPMENT AND MATERIALS WILL INCLUDE BUT NOT BE LIMITED TO BROOMS, DUST PANS, MOPS, RAGS, GLOVES, GOGGLES, LIQUID ABSORBENT (i.e. KITTY LITTER OR EQUAL), SAND, SAWDUST, AND PLASTIC AND METAL TRASH CONTAINERS SPECIFICALLY FOR THIS PURPOSE.

ALL SPILLS WILL BE CLEANED UP IMMEDIATELY AFTER DISCOVERY.

THE SPILL AREA WILL BE KEPT WELL VENTILATED AND PERSONNEL WILL WEAR APPROPRIATE PROTECTIVE CLOTHING TO PREVENT INJURY FROM CONTACT WITH A HAZARDOUS SUBSTANCE.

SPILL OF TOXIC OR HAZARDOUS MATERIAL WILL BE REPORTED TO THE APPROPRIATE STATE OR LOCAL GOVERNMENT AGENCY, REGARDLESS OF THE SIZE OF THE SPILL.

THE SPILL PREVENTION PLAN WILL BE ADJUSTED TO INCLUDE MEASURES TO PREVENT THIS TYPE OF SPILL FROM RE-OCCURRING AND HOW TO CLEAN UP THE SPILL IF THERE IS ANOTHER ONE. A DESCRIPTION OF THE SPILL, WHAT CAUSED IT, AND THE CLEANUP MEASURES WILL ALSO BE INCLUDED.

THE SITE SUPERINTENDENT RESPONSIBLE FOR THE DAY-TO-DAY SITE OPERATIONS, WILL BE THE SPILL PREVENTION AND CLEANUP COORDINATOR. HE/SHE WILL DESIGNATE AT LEAST ONE OTHER SITE PERSONNEL WHO WILL RECEIVE SPILL PREVENTION AND CLEANUP TRAINING. THESE INDIVIDUALS WILL EACH BECOME RESPONSIBLE FOR A PARTICULAR PHASE OF PREVENTION AND CLEANUP. THE NAMES OF RESPONSIBLE SPILL PERSONNEL WILL BE POSTED IN THE MATERIAL STORAGE AREA AND IF APPLICABLE, IN THE OFFICE TRAILER ONSITE.

MAINTENANCE/INSPECTION PROCEDURES

EROSION AND SEDIMENT CONTROL INSPECTION AND MAINTENANCE PRACTICES

THE FOLLOWING ARE INSPECTION AND MAINTENANCE PRACTICES THAT WILL BE USED TO MAINTAIN EROSION AND SEDIMENT CONTROLS.

* THE NPDES CONSTRUCTION PERMIT REQUIRES EROSION CONTROL DEVISES AND STORM WATER OUTFALLS TO BE INSPECTED WEEKLY (EVERY 7 CALENDAR DAYS) AND WITHIN 24 HRS OF A 0.5 INCH RAIN EVENT. IT WILL BE THE RESPONSIBILITY OF THE CONTRACTOR TO CONDUCT THESE INSPECTIONS AND MAINTAIN RECORDS UNTIL THE AREA HAS STABILIZED, EVIDENT BY 95% VEGETATIVE GROWTH FOR AREAS PROVIDED SEEDING. TO FACILITATE RAINFALL MONITORING A RAIN GAUGE IS REQUIRED TO BE ON SITE. ADDITIONALLY THE CONTRACTOR IS RESPONSIBLE FOR CONDUCTING "SELF INSPECTIONS" INDICATING THE DATE BMP'S ARE INSTALLED AND STABILIZATION MEASURES (SEEDING/MULCHING/SOD) ARE INITIATED. THE "SELF INSPECTION" REPORTS WILL BE MAINTAINED ALONG WITH THE "NPDES" INSPECTION REPORTS. ONCE STABILIZATION HAS BEEN ACCOMPLISHED INSPECTION RECORDS ARE TO BE FORWARDED TO EAD AND ALL TEMPORARY EROSION/SEDIMENTATION CONTROL DEVICES REMOVED. THE CONTRACTOR IS RESPONSIBLE FOR MAINTAINING COMPLIANCE WITH ALL PERMITS AND PLANS. ANY CHANGES WILL BE APPROVED BY THE STATE PRIOR TO EXECUTION. A COPY OF THE EROSION AND SEDIMENTATION CONTROL PLAN, LETTER OF APPROVAL, AND NPDES CONSTRUCTION PERMIT WILL BE MAINTAINED BY THE CONTRACTOR AT THE ONSITE OFFICE. IF SOIL IS REMOVED FROM OR BROUGHT ONSITE, THE APPLICABLE SOLID WASTE MANAGEMENT PERMIT NUMBER, EROSION SEDIMENTATION PERMIT NUMBER, OR MINE PERMIT NUMBER WILL BE DISCLOSED.

* NO MORE THAN 10 ACRES OF THE SITE WILL BE DENUDED AT ONE TIME WITHOUT WRITTEN PERMISSION FROM THE ENGINEER.
* ALL SEDIMENT CONTROL MEASURES WILL BE MAINTAINED IN GOOD WORKING ORDER; IF A REPAIR IS NECESSARY, IT WILL BE INITIATED WITHIN 24 HOURS OF REPORT.
* BUILT UP SEDIMENT WILL BE REMOVED FROM SILT FENCE WHEN IT HAS REACHED ONE-THIRD THE HEIGHT OF THE FENCE.
* SILT FENCE WILL BE INSPECTED FOR DEPTH OF SEDIMENT, TEARS, TO SEE IF THE FABRIC IS SECURELY ATTACHED TO THE FENCE POSTS, AND TO SEE THAT THE FENCE POSTS ARE FIRMLY IN THE GROUND.
* THE SEDIMENT BASINS WILL BE INSPECTED FOR THE DEPTH OF SEDIMENT, AND BUILT UP SEDIMENT WILL BE REMOVED WHEN IT REACHES 10 PERCENT OF THE DESIGN CAPACITY OR AT THE END OF THE JOB, WHICHEVER COMES FIRST.
* DIVERSION DIKES/SWALES WILL BE INSPECTED AND ANY BREACHES PROMPTLY REPAIRED.
* TEMPORARY AND PERMANENT SEEDING AND PLANTING WILL BE INSPECTED FOR BARE SPOTS, WASHOUTS, AND HEALTHY GROWTH.
* THE SITE SUPERINTENDENT WILL SELECT UP TO THREE INDIVIDUALS WHO WILL BE RESPONSIBLE FOR INSPECTIONS, MAINTENANCE AND REPAIR ACTIVITIES, AND FILLING OUT THE INSPECTION AND MAINTENANCE REPORT.
* PERSONNEL SELECTED FOR INSPECTION AND MAINTENANCE RESPONSIBILITIES WILL RECEIVE TRAINING FROM THE SITE SUPERINTENDENT THEY WILL BE TRAINED IN ALL THE INSPECTION AND MAINTENANCE PRACTICES NECESSARY FOR KEEPING THE EROSION AND SEDIMENT CONTROLS USED ONSITE IN GOOD WORKING ORDER.

NON-STORM WATER DISCHARGES

IT IS EXPECTED THAT THE FOLLOWING NON-STORM WATER DISCHARGES WILL OCCUR FROM THE SITE DURING THE CONSTRUCTION PERIOD:

* WATER FROM WATER LINE FLUSHING
* PAVEMENT WASH WATERS (WHERE NO SPILLS OR LEAKS OF TOXIC OR HAZARDOUS MATERIALS HAVE OCCURRED).
* UNCONTAMINATED GROUNDWATER (FROM DEWATERING EXCAVATION).

ALL NON-STORM WATER DISCHARGES WILL BE DIRECTED TO THE SEDIMENT BASIN PRIOR TO DISCHARGE.

CONTRACTOR'S CERTIFICATION

I CERTIFY UNDER PENALTY OF LAW THAT I UNDERSTAND THE TERMS AND CONDITIONS OF THE GENERAL NATIONAL POLLUTANT DISCHARGE ELIMINATION SYSTEM (NPDES) PERMIT THAT AUTHORIZES THE STORM WATER DISCHARGES ASSOCIATED WITH INDUSTRIAL ACTIVITY FROM THE CONSTRUCTION SITE IDENTIFIED AS PART OF THIS CERTIFICATION.

RESPONSIBLE FOR/DUTIES	GENERAL CONTRACTOR	SUB-CONTRACTOR	SUB-CONTRACTOR	SUB-CONTRACTOR	SUB-CONTRACTOR
BUSINESS NAME AND ADDRESS OF CONTRACTOR & ALL SUBS					
SIGNATURE					

MYRA W. JONES, P.E.
CIVIL ENGINEER
NORTH CAROLINA PROFESSIONAL ENGINEER SEAL 031309
REG. NO. 031309

HASKELL ARCHITECTS and ENGINEERS, P.A.
NORTH CAROLINA – Architecture # 51202, Engineering # C-2136

HASKELL
The Haskell Company
111 Riverside Avenue
Jacksonville, Florida 32202
Phone # (904) 791-4500

MARINE CORPS AIR STATION CHERRY POINT
RECREATIONAL VEHICLE PARK
CHERRY POINT, NORTH CAROLINA

DATE	ISSUE/REVISION
06/11/12	FINAL CDs
06/04/12	CI
04/09/12	OPT.2_95%
3/26/12	CPI 3
12/2/11	CPI 2
10/19/11	EAD 2
9/8/11	CPI
8/29/11	RPI
7/29/11	EAD REVIEW

We hereby expressly reserve the property rights to this drawing and it is not to be reproduced, copied in any format or manner whatsoever without first obtaining our express written permission and consent.

DRAWN BY: TML CHECKED BY: TML

AE JOB NUMBER 6601490

STORMWATER POLLUTION PREVENTION PLAN

C-542
SHEET NUMBER

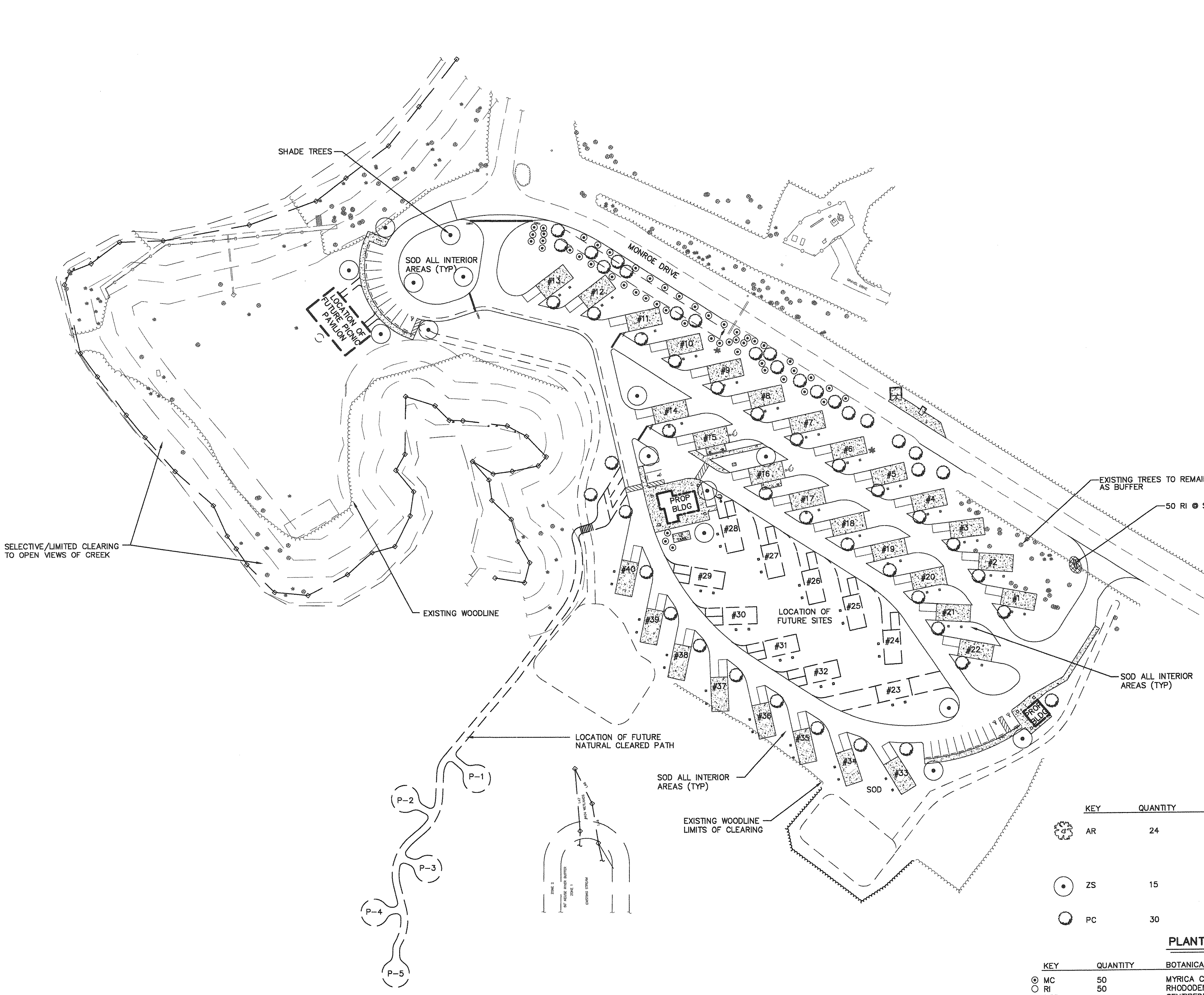

PLANT SCHEDULE (TREES)

KEY	QUANTITY	BOTANICAL NAME	COMMON NAME	SIZE	REMARKS
AR	24	ACER RUBRUM	OCT. GLORY MAPLE	2" CAL./10' HT.	B & B/F.G.
ZS	15	ZELKOVA SERRATA	ZELKOVA	2.5" CAL./12' HT.	B & B/F.G.
PC	30	PYRUS CALLEYANA	REDSPIRE PEAR	2.5" CAL./12' HT.	B & B/F.G.

PLANT SCHEDULE (SHRUBS & GROUND COVER)

KEY	QUANTITY	BOTANICAL NAME	COMMON NAME	SIZE	REMARKS
MC	50	MYRICA CERIFERA	WAX MYRTLE	7 GALLON	RANDOM SPACING
RI	50	RHODODENDRON INDICA	"GEORGE TABOR" AZALEA	3 GALLON	3' O.C.
SOD		CENTIPEDE SOLID SOD	VAR. OAKLAWN		
SEED		BAHIAGRASS SEED	VAR. WILMINGTON		

GENERAL NOTES:
1. SEE SITE DEMOLITION PLANS FOR REMOVAL OF ALL TREES
2. SEE EROSION AND SEDIMENT CONTROL PLANS FOR LIMITS OF CLEARING AND TREE PROTECTION.
3. SOD MUST NOT BE GROWN IN SOIL WITH AN IMPERMEABLE (CLAY) OR MUCK LAYER.
4. UTILITY PIPING, STORM DRAINAGE PIPING, ROOF DRAIN PIPING AND ALL ASSOCIATED APPURTANANCES ARE SHOWN FOR REFERENCE ONLY. SEE UTILITY PLANS AND DRAINAGE PLANS FOR EXACT INFORMATION AND LOCATIONS.
5. PROVIDE TEMPORARY IRRIGATION TO ESTABLISH TREES.

ERIC W. LYCKE A.S.L.A.
REG. NO. 1580

HASKELL ARCHITECTS and ENGINEERS, P.A.
NORTH CAROLINA – Architecture # 51202, Engineering # C-2136
HASKELL
The Haskell Company
111 Riverside Avenue
Jacksonville, Florida 32202
Phone # (904) 791-4500

MARINE CORPS AIR STATION CHERRY POINT

RECREATIONAL VEHICLE PARK

CHERRY POINT, NORTH CAROLINA

DATE	ISSUE/REVISION
06/11/12	FINAL CDs
06/04/12	CI
04/09/12	OPT.2_95%
3/26/12	CPI 3
12/2/11	CPI 2
10/19/11	EAD 2
9/8/11	CPI
7/29/11	EAD REVIEW
7/14/11	QDP

We hereby expressly reserve the property rights to this drawing and it is not to be reproduced, copied in any format or manner whatsoever without first obtaining our express written permission and consent.

DRAWN BY: TML | CHECKED BY: EWL

AE JOB NUMBER 6601490

LANDSCAPE PLAN

L-110
SHEET NUMBER

XREF: 24X36 LOGO [L:\CivilPublic\Projects\6601490 Cherry Point RV Park\201 Design\20 AutoCAD\B\24X36 LOGO.dwg]
XREF: 6601490LM-11 [L:\CivilPublic\Projects\6601490 Cherry Point RV Park\201 Design\20 AutoCAD\C\6601490LM-11.dwg]
XREF: 6601490CM-10 [L:\CivilPublic\Projects\6601490 Cherry Point RV Park\201 Design\20 AutoCAD\C\6601490CM-10.dwg]
XREF: 6601490CM-11 [L:\CivilPublic\Projects\6601490 Cherry Point RV Park\201 Design\20 AutoCAD\C\6601490CM-11.dwg]

L:\CivilPublic\Projects\6601490 Cherry Point RV Park\201 Design\20 AutoCAD\C\6601490L-110.dwg Layout Name: L-110 Jun 06, 2012 – 11:18am PLOTTED BY: dbpoor

GOVERNING CODES:

INTERNATIONAL BUILDING CODE 2009 (PER UFC 1-200-01)
REFERENCED EDITIONS OF ACI, AISC, AWS, SDI, SJI
WIND LOADS AND SEISMIC LOADS - PER ASCE 7-05

DESIGN LOADS:

ROOF DEAD LOAD:

TOP CHORD:
ASPHALT SHINGLES .... 2.0 PSF
PLYWOOD (1/2" THICK) .... 2.0 PSF
ICE AND WATER SHIELD .... 1.0 PSF
METAL DECK .... 2.5 PSF
MISC. TOP .... 1.5 PSF

BOTTOM CHORD:
MEP .... 3.0 PSF
INSULATION .... 2.0 PSF
CEILING .... 4.0 PSF
MISC. BOTTOM .... 1.5 PSF
FRAMING .... 4.5 PSF
TOTAL .... 24.0 PSF

MAX. RESISTING DEAD LOAD FOR TRUSS UPLIFT ..... 12.0 PSF

LIVE LOADS:

ROOF - LIVE LOADS .... TRIBUTARY AREA 0-200 SF = 20 PSF
TRIBUTARY AREA > 201 SF = PER IBC 2009
MINIMUM ROOF LIVE LOAD = 16 PSF

WIND LOADS:

128 MPH, EXPOSURE C, ENCLOSED BUILDING, CATEGORY II
IMPORTANCE FACTOR, Iw = 1.0
INTERNAL PRESSURE COEFFICIENT = ±0.18
COMPONENTS & CLADDING WIND PRESSURES - SEE SHEET S-002
GROSS UPLIFT PRESSURES - SEE SHEET S-002

GROUND SNOW LOAD: .... 10 PSF

SEISMIC LOADING: PER IBC 2009 (REFERS TO ASCE 7-05)

IMPORTANCE FACTOR, Ie = 1.0
OCCUPANCY CATEGORY = II
MAPPED SHORT PERIOD SPECTRAL RESPONSE, Ss = 0.16
MAPPED 1.0 SEC PERIOD SPECTRAL RESPONSE, S1 = 0.07
SOIL SITE CLASS = ASSUMED D
DESIGN SHORT PERIOD SPECTRAL RESPONSE, Sds = 0.17
DESIGN 1.0 SEC PERIOD SPECTRAL RESPONSE, Sd1 = 0.11
SEISMIC DESIGN CATEGORY = B
BASIC SEISMIC RESISTING SYSTEM = ORDINARY REINFORCED MASONRY SHEAR WALLS
SEISMIC RESPONSE COEFFICIENT, Cs = 0.085
RESPONSE MODIFICATION FACTOR, R = 2.0
ANALYSIS PROCEDURE USED = EQUIVALENT LATERAL FORCE PROCEDURE
DESIGN BASIS SHEAR, V = CsW

SITE CLASS BASED ON REPORT OF GEOTECHNICAL EXPLORATION FROM PREVIOUS PROJECTS ON BASE.

SOIL PROPERTIES:

ALLOWABLE SOIL BEARING PRESSURE .... 2000 PSF
MODULUS OF SUBGRADE REACTION .... 125 PCI
SOIL BEARING PRESSURE BASED ON REPORT OF GEOTECHNICAL EXPLORATION FROM ECS CAROLINAS, DATED AUGUST 29, 2011.

MATERIALS:

CONCRETE (NORMAL WEIGHT - 28 DAY COMPRESSIVE STRENGTH):
FOOTING .... 3000 PSI - CEMENT = TYPE II W/ FLY ASH
SLABS ON GRADE .... 3500 PSI - CEMENT = TYPE I OR II

MASONRY SYSTEM .... f'm = 1500 PSI
GROUT (28 DAY COMP. STRENGTH) .... 2000 PSI ASTM C-476
MORTAR .... ASTM, C270, TYPE M OR S
UNDER SLAB VAPOR RETARDER .... 10 MIL - ASTM E1745 CLASS "A"
REINFORCING .... ASTM A615, GRADE 60
WELDED WIRE FABRIC .... ASTM A185
STRUCTURAL STEEL .... ASTM A992, Fy = 50 KSI
STEEL PIPE .... A53 GRADE B, Fy = 36 KSI
ROUND HSS .... ASTM A500 GRADE B, Fy = 42 KSI
RECTAGULAR & SQUARE HSS .... ASTM A500 GRADE B, Fy = 46 KSI
PLATE AND ANGLES .... ASTM A36
ANCHOR BOLTS .... ASTM F1554, GRADE 36
HIGH STRENGTH BOLTS .... ASTM A325
WELDS PER AWS:
STRUCTURAL .... E70 SERIES
DEFORMED BAR ANCHORS .... ASTM A496
WELDED STUDS .... ASTM A108
EPOXY ANCHORS .... ITW RED HEAD EPCON G5 EPOXY ADHESIVE ANCHORING SYSTEM OR EQUAL
METAL ROOF DECK .... 1 1/2" DEEP, 20 GA., GALV. WIDE RIB STEEL ROOF DECK. MIN. SECTION PROPERTIES, I = 0.213, Sp = 0.235, Sn = 0.247
MASONRY SCREW ANCHORS .... HILTI HUS-EZ OR EQUAL
PLYWOOD .... EXTERIOR GRADE, CD
COLUMN BRICK TIES ... 1 1/4" x 14 GA. NON-CORRUGATED SHEET STEEL

OSHA REQUIREMENT:

1. ALL WORK SHALL COMPLY WITH OCCUPATIONAL SAFETY AND HEALTH ADMINISTRATION (OSHA) SAFETY AND HEALTH STANDARDS FOR THE CONSTRUCTION INDUSTRY, 29 CFR 1926

THESE REGULATIONS HAVE AN EXTENSIVE SCOPE AND INCLUDE SPECIFIC REQUIREMENTS FOR DESIGN, DETAILING, FABRICATION, ERECTION, AND SITE PROCEDURES.

NOTES FOR PIPING SYSTEM SUPPORTS:

1. IN ALL CASES, PIPING LOADS SUPPORTED FROM TRUSSES SHALL BE APPLIED IN A MANNER SO AS NOT TO EXCEED 2 PSF (PIPING ALLOWANCE FOR ROOF FRAMING MEMBERS).
2. PIPING LINES OF 3" TO 5" DIAMETER SHALL BE SUPPORTED EQUALLY FROM TWO TRUSSES IF THE LINES RUN PARALLEL TO THE TRUSSES.
3. PIPING LINES OF 5" AND 6" DIAMETER SHALL BE SUPPORTED FROM EVERY TRUSS, AND LINES OF 4" OR SMALLER SHALL BE SUPPORTED FROM EVERY OTHER TRUSS IF THE LINES RUN PERPENDICULAR TO THE TRUSS.
4. THE HANGERS SHALL BE SUPPORTED FROM TRUSS PANEL POINTS WHEREVER POSSIBLE. SEE DETAILS ON STRUCTURAL DRAWINGS FOR ADDITIONAL BRACING REQUIREMENTS WHEN THE HANGER IS LOCATED MORE THAN 6" FROM THE PANEL POINT.
5. FOR LOAD CONDITIONS NOT COVERED ABOVE, OBTAIN APPROVAL FROM STRUCTURAL ENGINEER PRIOR TO FABRICATION.

TRUSS SYSTEM DESIGN NOTES:

1. "TRUSS SYSTEM" SHALL MEAN AN ASSEMBLAGE OF TRUSSES AND TRUSS GIRDERS, TOGETHER WITH ALL TEMPORARY & PERMANENT BRACING, CONNECTIONS, AND OTHER STRUCTURAL ELEMENTS AND ALL SPACING AND LOCATION CRITERIA THAT, IN COMBINATION, FUNCTION TO SUPPORT THE DEAD, LIVE AND WIND LOADS APPLICABLE TO THE ROOF OF A STRUCTURE. CONNECTIONS INCLUDE BRACING CONNECTIONS, TRUSSES TO TRUSS CONNECTIONS AND TRUSS TO STRUCTURAL SUPPORT CONNECTIONS. A TRUSS SYSTEM DOES NOT INCLUDE WALLS, FOUNDATIONS OR ANY OTHER STRUCTURAL SUPPORT SYSTEM. "TRUSS SYSTEM ENGINEER" SHALL MEAN A DELEGATED ENGINEER WHO DESIGNS TRUSS SYSTEM.
2. EACH OF THE DRAWINGS IN THE TRUSS SYSTEM DESIGN PACKAGE FOR THE TRUSS SYSTEM SHALL INCLUDE A TITLE BLOCK BEARING THE PRINTED NAME, ADDRESS, AND LICENSE NUMBER OF THE TRUSS SYSTEM ENGINEER AND THE DATE OF THE DRAWING. THE DESIGN DOCUMENTATION PREPARED BY THE TRUSS SYSTEM ENGINEER SHALL ALSO INCLUDE A TRUSS PLACEMENT PLAN FOR THE TRUSS SYSTEM SHOWING THE LOCATION AND DESIGNATION OF EACH TRUSS. SAID DESIGN DOCUMENTATION FOR THE TRUSS SYSTEM SHALL BE SIGNED AND SEALED BY THE TRUSS SYSTEM ENGINEER.
3. "TRUSS DESIGN ENGINEER" SHALL MEAN AN ENGINEER WHO DESIGNS INDIVIDUAL TRUSSES.
4. EACH OF THE DRAWINGS IN THE TRUSS DESIGN PACKAGE FOR INDIVIDUAL TRUSSES SHALL INCLUDE A TITLE BLOCK BEARING THE PRINTED NAME, ADDRESS, AND LICENSE NUMBER OF THE TRUSS DESIGN ENGINEER AND THE DATE OF THE DRAWING. THE TRUSS DESIGN DOCUMENTS PREPARED BY TRUSS DESIGN ENGINEER SHALL BE SIGNED AND SEALED BY THE TRUSS DESIGN ENGINEER.
5. TRUSS SYSTEM ENGINEER AND TRUSS DESIGN ENGINEER CAN BE SAME ENGINEER OR TWO SEPARATE ENGINEERS. STRUCTURAL ENGINEER OF THE RECORD FOR THE BUILDING DOES NOT ACT AS EITHER TRUSS SYSTEM ENGINEER OR TRUSS DESIGN ENGINEER.
6. TRUSS SYSTEM ENGINEER IS RESPONSIBLE FOR COORDINATING TRUSS SYSTEM DRAWINGS WITH INDIVIDUAL TRUSS DESIGN DOCUMENTS.
7. SUBMIT TRUSS SYSTEM DESIGN PACKAGE AND TRUSS DESIGN PACKAGE TO STRUCTURAL ENGINEER OF RECORD FOR REVIEW AND APPROVAL PRIOR TO FABRICATION.

CONCRETE LAP SCHEDULE

BAR #	LAP LENGTH
3	20"
4	27"
5	33"
6	40"

REQUIREMENTS FOR SPECIAL INSPECTION

GENERAL

SPECIAL INSPECTION SHALL BE IN ACCORDANCE WITH SECTION 1704 OF THE 2009 INTERNATIONAL BUILDING CODE.

SPECIAL INSPECTIONS SHALL BE PERFORMED BY AN INDEPENDENT APPROVED AGENCY.

SPECIAL INSPECTOR SHALL BE A QUALIFIED PERSON(S) WHO SHALL DEMONSTRATE COMPETENCE FOR INSPECTION OF THE TYPE OF CONSTRUCTION OR OPERATION REQUIRING SPECIAL INSPECTION.

SPECIAL INSPECTOR SHALL FURNISH INSPECTION REPORTS TO THE PROJECT MANAGER, AND TO THE ENGINEER OF RECORD, DISTRIBUTED ON A REGULAR BASIS.

REPORTS SHALL INDICATE THAT WORK INSPECTED WAS PERFORMED IN CONFORMANCE WITH APPROVED CONSTRUCTION DOCUMENTS, OR INDICATE DISCREPANCIES.

DISCREPANCIES SHALL BE BROUGHT TO THE IMMEDIATE ATTENTION OF THE PROJECT MANAGER AND ENGINEER OF RECORD.

SUBMIT A FINAL REPORT DOCUMENTING ALL SPECIAL INSPECTIONS FOR EACH TYPE OF CONSTRUCTION, INCLUDE RESOLUTIONS AND/OR CORRECTIONS FOR ANY NOTED DISCREPANCIES. FINAL REPORT SHALL BE SIGNED AND SEALED BY A REGISTERED PROFESSIONAL ENGINEER.

FOR ITEMS REQUIRING CONTINUOUS SPECIAL INSPECTION:

INSPECT WORK ON A FULL-TIME BASIS, AND BE PRESENT IN THE AREA FOR THE DURATION OF THE ACTIVITY.

FOR ITEMS REQUIRING PERIODIC SPECIAL INSPECTION:

INSPECT WORK PERFORMED ON THE FIRST DAY OF ANY CONSTRUCTION ACTIVITY REQUIRING SPECIAL INSPECTION.INSPECT WORK ON A PERIODIC BASIS THEREAFTER FOR THE DURATION OF THE ACTIVITY.

STEEL CONSTRUCTION (REFERENCE IBC-2009, TABLE 1704.3)

MATERIAL VERIFICATION OF STRUCTURAL STEEL: IDENTIFICATION MARKING TO CONFORM TO ASTM STANDARDS SPECIFIED IN THE APPROVED CONSTRUCTION DOCUMENTS.

SUBMITTAL OF MANUFACTURER'S CERTIFIED MILL TEST REPORTS TO ENGINEER OF RECORD IS REQUIRED.

STRUCTURAL WELDING:
VERIFY MATERIALS, WELDING PROCEDURES, AND QUALIFICATIONS OF WELDERS PRIOR TO THE START OF WORK.

WELDING INSPECTION AND BASIS FOR WELDING INSPECTOR QUALIFICATION SHALL BE IN COMPLIANCE WITH AWS D1.1.

COMPONENTS REQUIRING CONTINUOUS INSPECTION:
MULTI-PASS FILLET WELDS,
SINGLE PASS FILLET WELDS EXCEEDING 5/16" SIZE.

COMPONENTS REQUIRING PERIODIC INSPECTION:
SINGLE PASS FILLET WELDS NOT EXCEEDING 5/16" SIZE,
ROOF DECK WELDING,
VERIFICATION OF WELDABILITY OF REINFORCING STEEL OTHER THAN ASTM A706

DETAILS:

INSPECT STEEL FRAMING TO VERIFY COMPLIANCE WITH THE DETAILS SHOWN ON THE APPROVED CONSTRUCTION DOCUMENTS, SUCH AS BRACING, STIFFENING, MEMBER LOCATIONS, AND PROPER APPLICATION OF JOINT DETAILS AT EACH CONNECTION.

HIGH-STRENGTH BOLTS:

INSPECT IN ACCORDANCE WITH AISC/RCSC SPECIFICATIONS.

MATERIAL VERIFICATION OF HIGH-STRENGTH BOLTS, NUTS, AND WASHERS: PERIODICALLY INSPECT FOR IDENTIFICATION MARKING TO CONFORM TO ASTM STANDARDS SPECIFIED IN THE APPROVED CONSTRUCTION DOCUMENTS.

FOR BOLTS REQUIRED TO BE TIGHTENED TO ONLY TO THE SNUG-TIGHT CONDITION, VERIFY THE CONNECTED PARTS HAVE BEEN DRAWN TOGETHER AND PROPERLY SNUGGED.

PERIODIC INSPECTION:
FOR BEARING CONNECTIONS: MONITOR FOR SNUG-TIGHT CONDITION.

CONCRETE CONSTRUCTION (REFERENCE IBC-2009, TABLE 1704.4)

COMPONENTS REQUIRING CONTINUOUS INSPECTION:
SAMPLING OF FRESH CONCRETE TO PERFORM SLUMP TESTS, AIR CONTENT TESTS, AND TEMPERATURE READINGS.
TAKING OF CONCRETE TEST SPECIMENS, SEE PROJECT SPECIFICATION SECTION 03000.
INSPECTION OF CONCRETE PLACEMENT FOR PROPER APPLICATION TECHNIQUES, INCLUDING MIXING, CONVEYING, DEPOSITING, AND VIBRATING.

COMPONENTS REQUIRING PERIODIC INSPECTION:
INSPECTION AND PLACEMENT OF REINFORCING STEEL.
VERIFY USE OF APPROVED DESIGN MIX.
INSPECTION OF CURING TEMPERATURE AND TECHNIQUE.

REQUIREMENTS FOR SPECIAL INSPECTION CONTINUED

EXPANSION BOLTS:

THE SPECIAL INSPECTOR MUST MAKE PERIODIC INSPECTIONS DURING ANCHOR INSTALLATION TO VERIFY ANCHOR TYPE, ANCHOR DIMENSIONS, CONCRETE TYPE, CONCRETE THICKNESS, ANCHOR EMBEDMENT AND ADHERENCE TO THE MANUFACTURER'S INSTALLATION REQUIREMENTS AND REQUIREMENTS PER ESR 1917.

SOILS (REFERENCE IBC-2009, TABLE 1704.7)

SPECIAL INSPECTIONS FOR EXISTING SITE SOIL CONDITIONS, FILL PLACEMENT AND LOAD-BEARING REQUIREMENTS SHALL FOLLOW TABLE 1704.7 AND IBC.

THE APPROVED SOILS REPORT SHALL BE USED TO DETERMINE COMPLIANCE.

COMPONENTS REQUIRING CONTINUOUS INSPECTION:
VERIFY USE OF PROPER MATERIALS, DENSITIES AND LIFT THICKNESSES DURING PLACEMENT AND COMPACTION OF CONTROLLED FILL.

COMPONENTS REQUIRING PERIODIC INSPECTION:
VERIFY MATERIALS BELOW FOOTINGS ARE ADEQUATE TO ACHIEVE THE DESIGN BEARING CAPACITY.
VERIFY EXCAVATIONS ARE EXTENDED TO PROPER DEPTH AND HAVE REACHED PROPER MATERIAL.
PERFORM CLASSIFICATION OF AND TESTING OF CONTROLLED FILL MATERIALS.
PRIOR TO PLACEMENT OF CONTROLLED FILL, OBSERVE SUBGRADE AND VERIFY THAT SITE HAS BEEN PREPARED PROPERLY.

TABLE 1704.5.1
LEVEL 1 REQUIRED VERIFICATION AND INSPECTION OF MASONRY CONSTRUCTION

VERIFICATION AND INSPECTION	FREQUENCY OF INSPECTION		REFERENCE FOR CRITERIA		
	CONTINUOUS	PERIODIC	IBC SECTION	TMS 402/ACI 530/ASCE 5[a]	TMS 602/ACI 530.1/ASCE 6[a]
1. COMPLIANCE WITH REQUIRED INSPECTION PROVISIONS OF THE CONSTRUCTION DOCUMENTS AND THE APPROVED SUBMITTALS SHALL BE VERIFIED.	--	X	--	--	ART. 1.5
2. VERIFICATION OF f_m PRIOR TO CONSTRUCTION EXCEPT WHERE SPECIFICALLY EXEMPTED BY THIS CODE.	--	X	--	--	ART. 1.4B
3. VERIFICATION OF SLUMP FLOW AND VSI AS DELIVERED TO THE SITE FOR SELF-CONSOLIDATING GROUT.	X	--	--	--	ART. 1.5B.1.b.3
4. AS MASONRY CONSTRUCTION BEGINS, THE FOLLOWING SHALL BE VERIFIED TO ENSURE COMPLIANCE:					
a. PROPORTIONS OF SITE-PREPARED MORTAR.	--	X	--	--	ART. 2.6A
b. CONSTRUCTION OF MORTAR JOINTS.	--	X	--	--	ART. 3.3B
c. LOCATION OF REINFORCEMENT, CONNECTORS, AND ANCHORAGES.	--	X	--	--	ART. 3.4, 3.6A
5. DURING CONSTRUCTION THE INSPECTION PROGRAM SHALL VERIFY:					
a. SIZE AND LOCATION OF STRUCTURAL ELEMENTS.	--	X	--	--	ART. 3.3F
b. TYPE, SIZE AND LOCATION OF ANCHORS, INCLUDING OTHER DETAILS OF ANCHORAGE OF MASONRY TO STRUCTURAL MEMBERS, FRAMES OR OTHER CONSTRUCTION.	--	X	--	SEC. 1.2.2(e), 1.16.1	--
c. SPECIFIED SIZE, GRADE AND TYPE OF REINFORCEMENT, ANCHOR BOLTS, AND ANCHORAGES.	--	X	--	SEC. 1.15	ART. 2.4, 3.4
d. PREPARATION, CONSTRUCTION AND PROTECTION OF MASONRY DURING COLD WEATHER (TEMPERATURE BELOW 40°F) OR HOT WEATHER (TEMPERATURE ABOVE 90°F)	--	X	SEC. 2104.3, 2104.4	--	ART. 1.8C, 1.8D
6. PRIOR TO GROUTING, THE FOLLOWING SHALL BE VERIFIED TO ENSURE COMPLIANCE:					
a. GROUT SPACE IS CLEAN.	--	X	--	--	ART. 3.2D
b. PLACEMENT OF REINFORCEMENT AND CONNECTORS, AND ANCHORAGES.	--	X	--	SEC. 1.13	ART. 3.4
c. PROPORTIONS OF SITE-PREPARED GROUT	--	X	--	--	ART. 2.6B
d. CONSTRUCTION OF MORTAR JOINTS.	--	X	--	--	ART. 3.3B
7. GROUT PLACEMENT SHALL BE VERIFIED TO ENSURE COMPLIANCE.	X	--	--	--	ART. 3.5
8. PREPARATION OF ANY REQUIRED GROUT SPECIMENS, MORTAR SPECIMENS SHALL BE OBSERVED.	--	X	SEC. 2105.2.2, 2105.3	--	ART. 1.4

FOR SI: °C = [(°F)-32]/1.8
a. THE SPECIFIC STANDARDS REFERENCED ARE THOSE LISTED IN CHAPTER 35.

MATTHEW R. HAMANN, P.E.
STRUCTURAL ENGINEER

HASKELL ARCHITECTS and ENGINEERS, P.A.
NORTH CAROLINA - Architecture # 51202, Engineering # C-2136

The Haskell Company
111 Riverside Avenue
Jacksonville, Florida 32202
Phone # (904) 791-4500

HASKELL
America's Design-Build Leader®

MARINE CORP AIR STATION CHERRY POINT
RECREATIONAL VEHICLE PARK
CHERRY POINT, NORTH CAROLINA

DATE	ISSUE/REVISION
6/11/12	FINAL CD
6/4/12	CI
4/9/12	OPT. 2_95%
7/1/11	PR

We hereby expressly reserve the property rights to this drawing and it is not to be reproduced or copied in any format or manner whatsoever without first obtaining our express written permission and consent.

DRAWN BY: SGF
CHECKED BY: MRH

AE JOB NUMBER: 6601490

GENERAL STRUCTURES NOTES (1 OF 3)

S-001
SHEET NUMBER

C:\Revit_Local\6601490201\6601490AM(BATHHOUSE)-sgfairfax.RVT 6/7/2012 4:20:34 PM

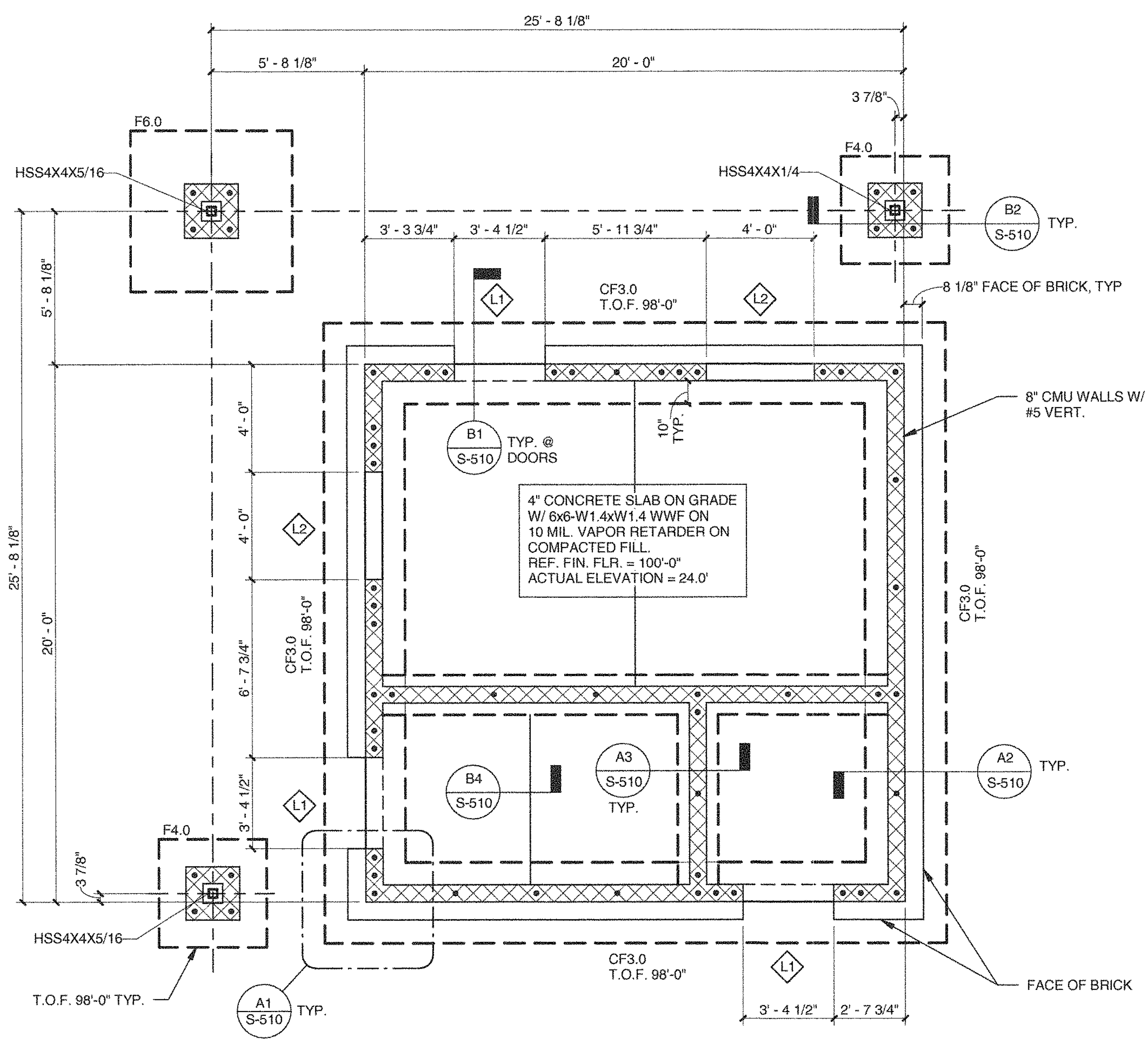

FOUNDATION PLAN

1/4" = 1'-0"

TRUE NORTH

PLAN NORTH

NOTES:

1. FOR GENERAL NOTES, SEE S-001 & S-002.
2. FOR MASONRY NOTES SEE S-003.
3. FOR FOOTING SCHEDULE, SEE A4/S-510.
4. FOR FOUNDATION SECTIONS & DETAILS, SEE S-510.
5. FOR INTERIOR WALL LOCATIONS & DIMENSIONS, SEE ARCH. DWGS.
6. FOR SLAB FINISHES, SEE ARCH. DWGS.
7. FOR ADDITIONAL INFORMATION REGARDING FLOOR SLOPES, DEPRESSIONS, RECESSES, & DRAIN LOCATIONS, SEE ARCH. AND/OR PLUMBING DWGS.
8. FOR MASONRY LINTEL SCHEDULE, SEE S-003.
9. [symbol] INDICATES 1-#5 CTR'D.
   [symbol] INDICATES #5 E.F.
10. L# INDICATES LINTEL ABOVE OPENING, SEE SHEET S-003 FOR LINTEL SCHEDULE.

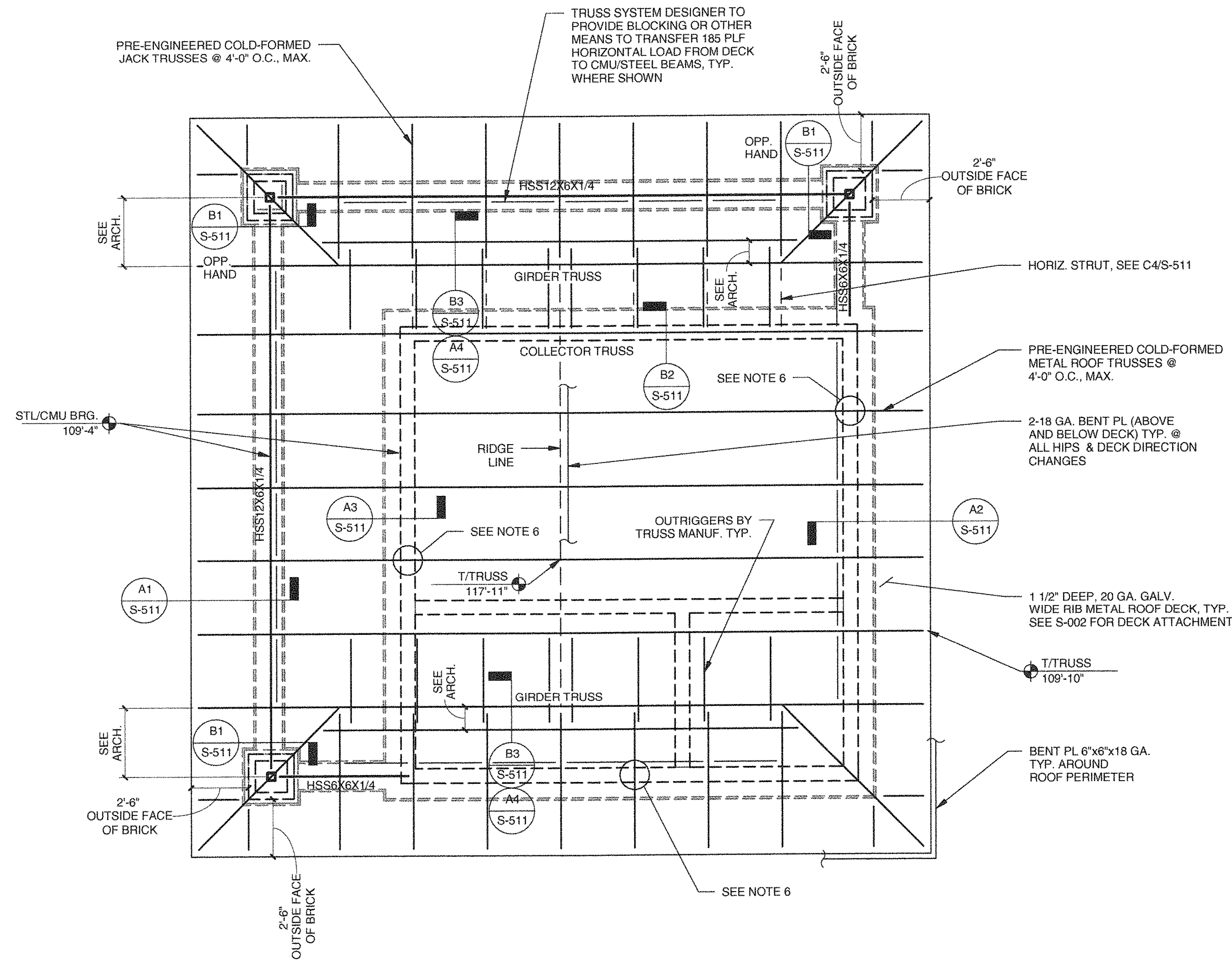

ROOF FRAMING PLAN

1/4" = 1'-0"

TRUE NORTH

PLAN NORTH

NOTES:

1. FOR GENERAL NOTES, SEE S-001 & S-002.
2. FOR ROOF WIND PRESSURES, SEE S-002.
3. VERIFY ALL ROOF SLOPES AND ELEVATIONS W/ ARCH.
4. FOR MASONRY LINTEL SCHEDULE, SEE S-003.
5. SEE S-001, "TRUSS SYSTEM DESIGN NOTES" FOR TRUSS SYSTEM DESIGN AND SUBMITTAL REQUIREMENTS.
6. AT ALL STEEL TRUSSES BEARING ON PERPENDICULAR EXTERIOR WALLS, TRUSS MANUF. IS TO PROVIDE CONNECTION TO BEARING PLATE WITH SUFFICIENT CAPACITY TO RESIST A 925# HORIZONTAL WIND LOAD AND TRUSS MUST TRANSFER A 650# HORIZONTAL WIND LOAD FROM BOTTOM CHORD TO TOP CHORD.
7. EAST SIDE "GIRDER TRUSS" AND WEST SIDE "COLLECTOR TRUSS" MUST BE DESIGNED TO TRANSFER 150 PLF FROM TOP CHORD TO BOTTOM CHORD.
8. SEE S-002, NOTE 7, FOR SOFFIT DESIGN WIND PRESSURES.
9. TRUSS MANUF. TO COORDINATE GABLE END TRUSSES W/ LOUVER PROFILES.
10. PROVIDE FASTENERS FOR PLYWOOD TO STEEL DECK ATTACHMENT CAPABLE OF RESISTING WIND LOADS PER SHEET S-002.

MATTHEW R. HAMANN, P.E.
STRUCTURAL ENGINEER

HASKELL ARCHITECTS and ENGINEERS, P.A.
NORTH CAROLINA - Architecture # 51202, Engineering # C-2136

The Haskell Company
111 Riverside Avenue
Jacksonville, Florida 32202
Phone # (904) 791-4500

HASKELL
America's Design-Build Leader®

MARINE CORP AIR STATION CHERRY POINT

RECREATIONAL VEHICLE PARK

CHERRY POINT, NORTH CAROLINA

DATE	ISSUE/REVISION
6/11/12	FINAL CD
6/4/12	CI
4/9/12	OPT. 2_95%
7/14/11	QDP
7/1/11	PR

We hereby expressly reserve the property rights to this drawing and it is not to be reproduced or copied in any format or manner whatsoever without first obtaining our express written permission and consent.

DRAWN BY:	CHECKED BY:
SGF	MRH

AE JOB NUMBER
6601490

OFFICE CHECK-IN FOUNDATION & FRAMING PLANS

S-111
SHEET NUMBER

C:\Revit_Local\6601490\20166601490AM(OFFICE)-sgfairfax.RVT
6/7/2012 4:21:35 PM

Wind Loads - Components and Cladding ASCE7-05

Basic Wind Speed (Fig. 6-1 pgs. 32-36) = 128 mph
Exposure Catagory (Section 6.5.6 pgs 25-26) = C

h = 15.0 ft
I = 1.00

Kd = 0.85 B = 36 ft
Kh = 0.85 W = 36 ft
qh = 30.3 psf

GCpi = 0.18 Θ = 26.6 deg Slope Factor (Walls) = 1.0
GCpi = -0.18 a = 4.0 ft

Table Values, GCp:

Tributary Area (SF)	ROOF				WALLS			OVERHANGS	
	Uplift			Downward	Inward	Outward		Zone 1 & 2	Zone 3
	Zone 1	Zone 2	Zone 3	All Zones	Zone 4 & 5	Zone 4	Zone 5		
10	-0.90	-1.70	-2.60	0.500	1.00	-1.10	-1.40	-2.20	-3.70
20	-0.87	-1.55	-2.42	0.440	0.95	-1.05	-1.30	-2.20	-3.34
50	-0.83	-1.35	-2.18	0.360	0.88	-0.98	-1.15	-2.20	-2.86
100	-0.80	-1.20	-2.00	0.300	0.82	-0.93	-1.05	-2.20	-2.50
200	-0.80	-1.20	-2.00	0.300	0.77	-0.87	-0.94	-2.20	-2.50
500	-0.80	-1.20	-2.00	0.300	0.70	-0.80	-0.80	-2.20	-2.50

Wind Pressures (psf):

Tributary Area (SF)	ROOF				WALLS			OVERHANGS	
	Uplift			Downward	Inward	Outward		Zone 1 & 2 (psf)	Zone 3 (psf)
	Zone 1 (psf)	Zone 2 (psf)	Zone 3 (psf)	All Zones	Zone 4 & 5 (psf)	Zone 4 (psf)	Zone 5 (psf)		
10	-33	-57	-84	21	36	-39	-48	-72	-117
20	-32	-52	-79	19	34	-37	-45	-72	-107
50	-31	-46	-71	16	32	-35	-40	-72	-92
100	-30	-42	-66	15	30	-34	-37	-72	-81
200	-30	-42	-66	15	29	-32	-34	-72	-81
500	-30	-42	-66	15	27	-30	-30	-72	-81

NOTES:
1. COMPONENTS AND CLADDING LOADS IN THESE WIND TABLES ARE FOR BATHHOUSE BLDG. AND CHECK-IN BLDG. ONLY. DESIGN WIND PRESSURES ON PICNIC PAVILION ARE TO BE CALCULATED BASED ON OPEN BUILDING, CLEAR WIND FLOW, IMPORTANCE FACTOR = 1.0.
2. FOR EFFECTIVE AREAS BETWEEN THOSE GIVEN ABOVE THE LOAD MAY BE INTERPOLATED, OTHERWISE CONSERVATIVELY USE THE LOAD ASSOCIATED WITH THE LOWER EFFECTIVE AREA.
3. PLUS AND MINUS SIGNS SIGNIFY PRESSURES ACTING TOWARD AND AWAY FROM THE BUILDING SURFACE.
4. SEE DESIGN LOADS ON SHEET S-001 FOR MAXIMUM AVAILABLE DEAD LOAD FOR USE IN RESISTING WIND UPLIFT.
5. SEE ROOF WIND ZONE DIAGRAM FOR LOCATION OF ROOF ZONES.
6. FOR WALL COMPONENTS AND CLADDING LOADS, USE ZONE 5 PRESSURES WHEN WITHIN A DISTANCE, a, FROM THE END OF THE BUILDING. USE ZONE 4 PRESSURES WHEN DESIGN LOCATION IS > a FROM THE END OF THE BUILDING. SEE TABLE FOR EDGE ZONE LENGTH, a.
7. SOFFIT FRAMING ON THE UNDERSIDE OF TRUSS OVERHANGS IS TO BE DESIGNED FOR WIND PRESSURE EQUAL TO THE ADJACENT WALL PRESSURE.

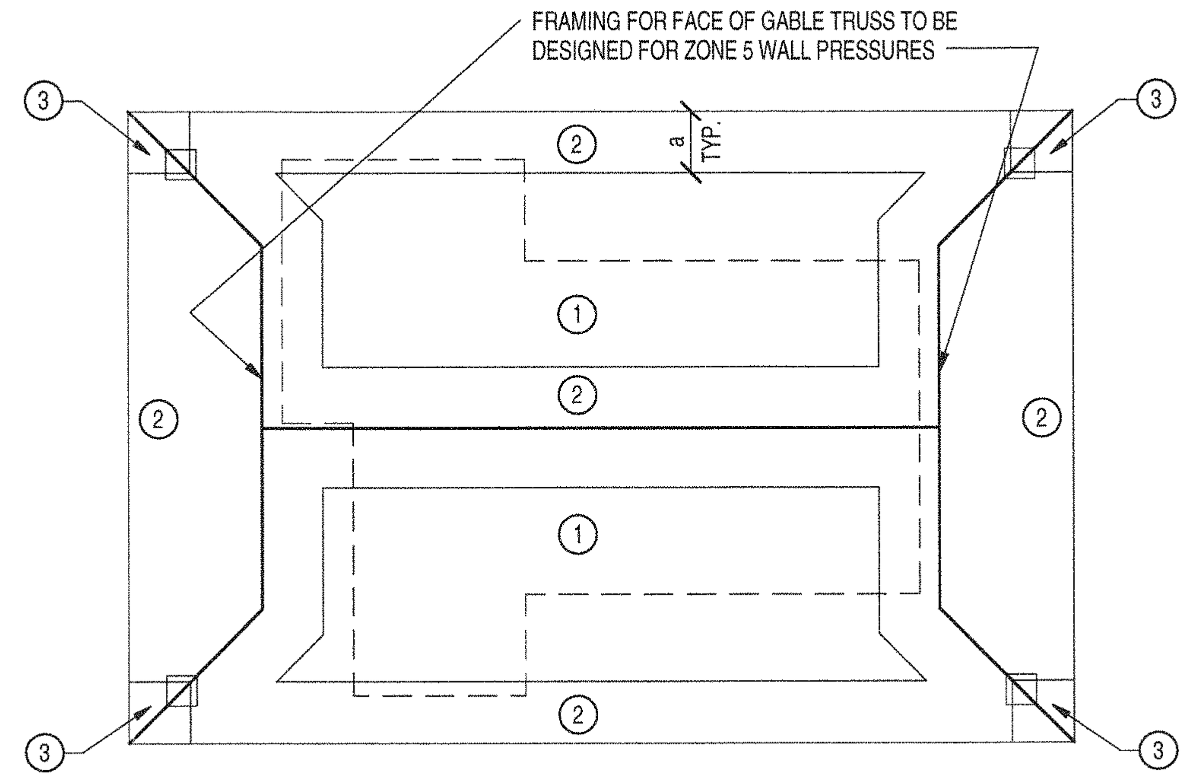

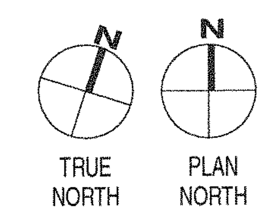

WIND ZONES FOR ROOF WIND PRESSURES - BATH HOUSE
SCALE: N.T.S.

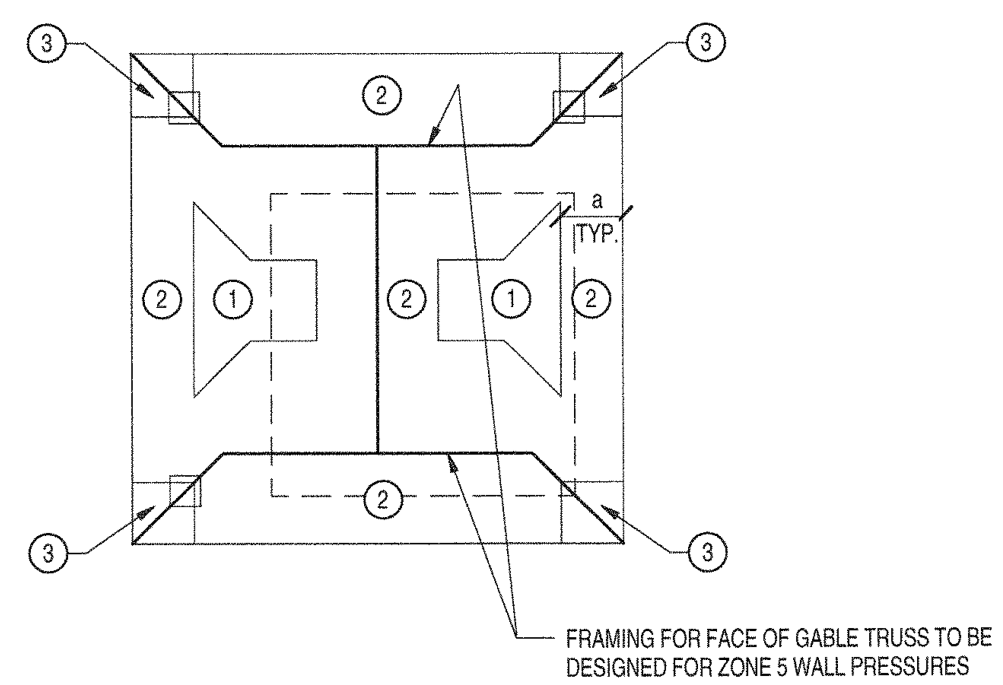

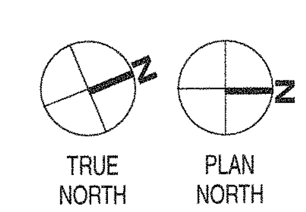

WIND ZONES FOR ROOF WIND PRESSURES - OFFICE CHECK-IN
SCALE: N.T.S.

ROOF DECK ATTACHMENT NOTES:
1. ATTACHMENT AT SUPPORTS SHALL BE #12 TEK SCREWS. ATTACHMENT TO STRUCTURAL FRAMES AROUND OPENINGS SHALL BE #12 TEK SCREWS.
2. ATTACHMENT AT SIDE SEAMS SHALL BE #10 TEK SCREWS.
3. ATTACHMENT AT 6" ON CENTER AROUND OPENINGS.
4. MINIMUM END LAP IS 4".
5. INSTALL:

36/7 - 4
NUMBER OF ATTACHMENTS AT SIDE SEAMS BETWEEN SUPPORTS, EQUALLY SPACED
ATTACHMENT PATTERN
36/7 = 7 - SCREWS OVER 36" COVER WIDTH

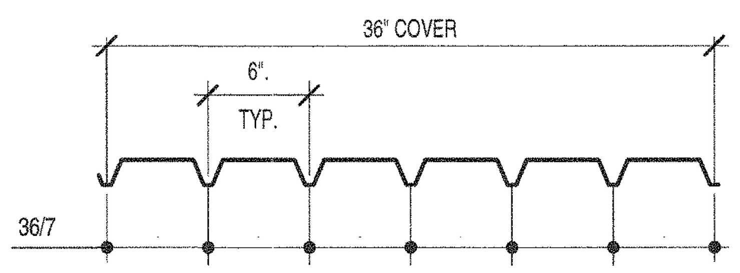

TYPICAL FASTENER LAYOUT

6. ATTACHMENT TO PERIMETER ANGLES SHALL BE #12 SCREWS @ 6" O.C.

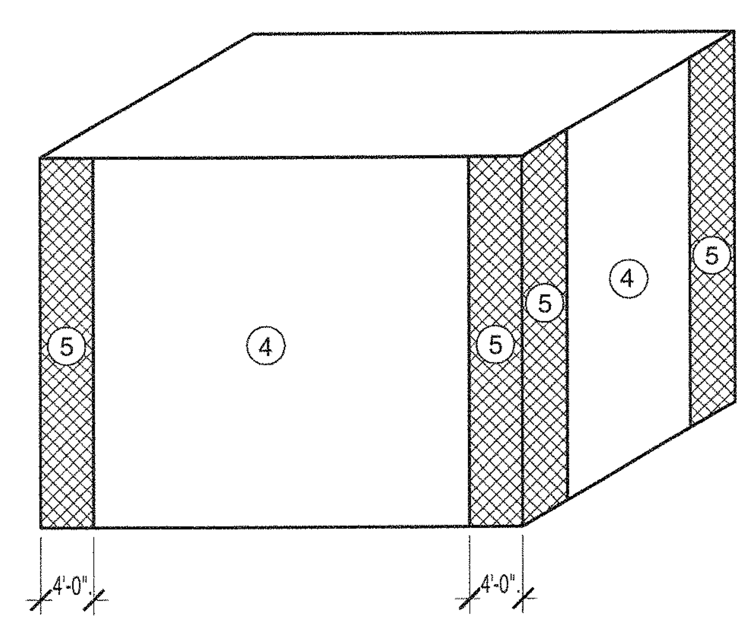

WIND ZONES FOR WALL WIND PRESSURES
SCALE: N.T.S.

STRUCTURAL ABBREVIATIONS

AB	ANCHOR BOLT
ALT	ALTERNATE
ARCH	ARCHITECTURAL
B/	BOTTOM OF
BLDG	BUILDING
BM	BEAM
BOT	BOTTOM
BRG	BEARING
C	CHANNEL SHAPE
CANT	CANTILEVER
CJ OR	CONTROL JOINT OR
CONST JT	CONSTRUCTION JOINT
CL	CENTERLINE
CMU	CONCRETE MASONRY UNIT
COL	COLUMN
CONC	CONCRETE
CONN	CONNECTION
CONST	CONSTRUCTION
CONT	CONTINUOUS
COORD	COORDINATE
CTRD	CENTERED
D	DEPTH
DBA	DEFORMED ANCHOR BAR
DBL	DOUBLE
DIA	DIAMETER
DIM	DIMENSION
DN	DOWN
DTL	DETAIL
DWG	DRAWING
DWL	DOWEL
EA	EACH
EE	EACH END
EF	EACH FACE
EJ	EXPANSION JOINT
EL/ELEV	ELEVATION
EOS	EDGE OF SLAB
EQ	EQUAL
EQUIP	EQUIPMENT
ES	EACH SIDE
EW	EACH WAY
EXIST	EXISTING
EXP	EXPANSION
EXT	EXTERIOR
FD	FLOOR DRAIN
FDN	FOUNDATION
FL	FULL LENGTH

FLR	FLOOR
FOM	FACE OF MASONRY
FS	FAR SIDE
FT	FOOT
FTG	FOOTING
FUT	FUTURE
GA	GAGE
GALV	GALVANIZED
GYP	GYPSUM
HORIZ	HORIZONTAL
HP	HIGH POINT
HSS	HOLLOW STRUCTURAL SECTION
IN	INCH
INFO	INFORMATION
INT	INTERIOR
INSUL	INSULATION
JST	JOIST
JT	JOINT
K	KIPS
KO	KNOCK OUT
KSF	KIPS PER SQUARE FOOT
KSI	KIPS PER SQUARE INCH
L	ANGLE
LE	LEFT END
LG	LONG
LLV	LONG LEG VERTICAL
LLH	LONG LEG HORIZONTAL
LSH	LONG SIDE HORIZONTAL
LP	LOW POINT
LW	LONG WAY
M	MIDDLE
MANUF/MFR	MANUFACTURER
MAX	MAXIMUM
MECH	MECHANICAL
MEP	MECHANICAL/ELECTRICAL/ PLUMBING
MEZZ	MEZZANINE
MIN	MINIMUM
MISC	MISCELLANEOUS
MO	MASONRY OPENING
MSL	MEAN SEA LEVEL
MTL	METAL
NS	NEAR SIDE
NTS	NOT TO SCALE
OC	ON CENTER
OPNG	OPENING
OPP	OPPOSITE

PL	PLATE
PLUMB	PLUMBING
PNL	PANEL
POLY	POLYETHYLENE
PSF	POUNDS PER SQUARE FOOT
PSI	POUNDS PER SQUARE INCH
QTY	QUANTITY
R	RADIUS
RE	RIGHT END
REF	REFERENCE
REINF	REINFORCING
REQD	REQUIRED
SCHED	SCHEDULE
SF	SQUARE FOOT
SHT	SHEET
SI	SQUARE INCH
SIM	SIMILAR
SL	SLOPE
SOG	SLAB ON GRADE
SPA	SPACES
SPEC	SPECIFICATION
STD	STANDARD
STIFF	STIFFENER
STL	STEEL
SW	SHORTWAY
SYM	SYMMETRICAL
T/	TOP OF
T&B	TOP AND BOTTOM
THK	THICK
TOF	TOP OF FOOTING
TOJ	TOP OF JOIST
TOS	TOP OF STEEL
TRANSV	TRANSVERSE
TS	TUBE STEEL
TYP	TYPICAL
UON	UNLESS OTHERWISE NOTED
VERT	VERTICAL
WF	WIDE FLANGE SHAPE
W/	WITH
WP	WORK POINT
WT	T SHAPE
WWF	WELDED WIRE REINFORCEMENT
&	AND
@	AT
ø	DIAMETER
#	NUMBER
+/-	PLUS/MINUS

MATTHEW R. HAMANN, P.E.
STRUCTURAL ENGINEER

HASKELL ARCHITECTS and ENGINEERS, P.A.
NORTH CAROLINA - Architecture # 51202, Engineering # C-2136

HASKELL®
America's Design-Build Leader

The Haskell Company
111 Riverside Avenue
Jacksonville, Florida 32202
Phone # (904) 791-4500

MARINE CORP AIR STATION CHERRY POINT
RECREATIONAL VEHICLE PARK
CHERRY POINT, NORTH CAROLINA

DATE	ISSUE/REVISION
6/11/12	FINAL CD
6/4/12	CI
4/9/12	OPT. 2_95%
7/14/11	QDP
7/1/11	PR

We hereby expressly reserve the property rights to this drawing and it is not to be reproduced or copied in any format or manner whatsoever without first obtaining our express written permission and consent.

DRAWN BY:	CHECKED BY:
SGF	MRH

AE JOB NUMBER
6601490

GENERAL STRUCTURAL NOTES (2 OF3)

S-002
SHEET NUMBER

C:\Revit_Local\6601490\20166601490AM(BATHHOUSE)-sgfairfax.RVT 6/7/2012 4:20:37 PM

MASONRY CONSTRUCTION NOTES

DEFINITIONS

GROUT POUR HEIGHT - THE TOTAL HEIGHT OF MASONRY TO BE GROUTED PRIOR TO ERECTION OF ADDITIONAL MASONRY.
GROUT POUR - CONSISTS OF ONE OR MORE GROUT LIFTS.
GROUT LIFT - THE LAYER OF GROUT PLACED IN A SINGLE CONTINUOUS OPERATION AND IS LIMITED TO 5 FEET.
RODDING - THE ACT OF COMPACTING FRESHLY POURED CONCRETE OR GROUT IN ITS FORM BY FREEING THE MASS OF AIR POCKETS WITH REPEATED STABS OF A ROD.
PUDDLING - THE PROCESS OF INDUCING COMPACTION OF GROUT BY USE OF A TAMPING ROD.
PUDDLE - THE ACT OF WORKING CONCRETE TO ELIMINATE HONEYCOMB, AND TO PRODUCE A DENSER MASS.
PUDDLE STICK - A STICK OR ROD USED TO CONSOLIDATE GROUT BY HAND.
LOW LIFT GROUTING IS WHERE THE WALL IS CONSTRUCTED TO POUR HEIGHTS UP TO 5'-0" AND NO CLEANOUTS ARE NEEDED.
HIGH LIFT GROUTING IS WHERE GROUT IS PLACED IN POURS OVER 5'-0", UP TO THE STORY HEIGHT OR TO A MAXIMUM OF 12'-8" PER ACI 530.1 SECTION 3.5D. CLEANOUT HOLES ARE REQUIRED AT THE BOTTOM OF EACH GROUT SPACE CONTAINING REINFORCEMENT WHEN HIGH LIFT GROUTING. WHEN CLEANOUTS ARE REQUIRED CONSTRUCT CLEANOUTS ADJACENT TO EACH VERTICAL BAR. THE MINIMUM CLEANOUT OPENING DIMENSION SHALL BE 3 INCHES. THE MINIMUM GROUT SPACE DIMENSIONS FOR A 5' GROUT POUR HEIGHT SHALL BE 2 INCHES x 3 INCHES. THE FOLLOWING CONDITIONS ARE REQUIRED TO BE MET FOR HIGH LIFT GROUTING:
  A) THE MASONRY HAS CURED FOR AT LEAST 4 HOURS.
  B) THE GROUT SLUMP IS MAINTAINED BETWEEN 10 AND 11 INCHES.
  C) NO INTERMEDIATE REINFORCED BOND BEAMS ARE PLACED BETWEEN THE TOP AND BOTTOM OF THE POUR HEIGHT.

CONSTRUCTION AND INSPECTION GUIDELINES

1. LAY UP MASONRY IN RUNNING BOND FOR SIZES AND REINFORCING PER PLANS AND ELEVATIONS.
2. PLACE CMU TO GROUT POUR HEIGHT AS DETERMINED BY CONDITIONS AND SITUATIONS AS TO THE LOCATION OF BOND BEAMS AND WALL HEIGHTS.
3. LOCATE CMU CONTROL JOINTS PER PLAN AND ELEVATIONS ON DRAWINGS.
4. FACE SHELLS OF BED JOINT SHALL BE MORTARED.
5. WEBS SHALL BE MORTARED AT CELLS TO BE GROUTED.
6. VERTICAL CELLS ARE TO BE ALIGNED WHERE THEY ARE TO BE GROUT FILLED UNLESS BOND IS SHIFTED DUE TO SITE CONDITIONS.
7. INSTALL HORIZONTAL JOINT REINFORCING AT 16 INCHES ON CENTER STARTING FIRST BLOCK ABOVE FOUNDATION.
8. PLACE JOINT REINFORCEMENT SO THAT WIRES ARE EMBEDDED IN MORTAR WITH A MINIMUM COVER OF 1/2" WHEN NOT EXPOSED TO EARTH OR WEATHER AND 5/8" WHEN EXPOSED TO EARTH OR WEATHER.
9. GROUT SPACES BOTH VERTICAL AND HORIZONTAL ARE TO BE SUBSTANTIALLY FREE OF DROPPINGS, DEBRIS, LOOSE AGGREGATE AND ANY MATERIAL DELETERIOUS TO MASONRY GROUT.
10. INSTALL REINFORCING IN GROUT CELLS PRIOR TO GROUTING.
11. GROUT SPACES ARE TO BE INSPECTED PRIOR TO PLACING GROUT.
12. FILL CELLS AS NOTED ON THE PLANS, ELEVATIONS AND DETAILS.
13. PLACE GROUT IN LIFT TO 60 INCHES IN HEIGHT (CLEAN OUT HOLES ARE NOT REQUIRED).
14. A REINFORCING BAR MAY BE USED TO ROD GROUT IN CELL, TO ENSURE THERE ARE NO VOIDS IN GROUT.
15. PLACE REINFORCING APPROXIMATELY 1 INCH TO THE SIDE OF DOWEL IN CELL (ACI 530-1.12.3.3)
16. GROUT SHOULD SET IN APPROXIMATELY 90 MINUTES DEPENDING ON GROUT SLUMP AND WEATHER CONDITIONS.
17. DO NOT BEND OR MOVE REINFORCEMENT AFTER GROUT HAS SET.
18. WHEN GROUT LIFT TERMINATES AT TOP OF THE GROUT POUR OR SUFFICIENT TIME HAS PASSED AND AN EARLIER LIFT HAS SET, THE GROUT LIFT SHALL BE STOPPED 1 1/2" BELOW THE BED JOINT.

TOLERANCES

CENTER REINFORCING:
1. CENTERLINE LOCATION SHOULD BE WITHIN ½ INCH OF CENTER OF MASONRY.
2. HORIZONTAL LOCATION SHALL BE WITHIN 2 INCHES OF THE CENTER OF THE CELL.
3. REINFORCING SHALL MAINTAIN POSITION WITHOUT BEING TIED.
4. DO NOT MOVE REINFORCING AFTER INITIAL SET OF GROUT.

REINFORCING AT EACH FACE:
1. MAINTAIN AT LEAST ¼ INCH CLEAR OF MASONRY FOR FINE GROUT AND ½ INCH FOR COARSE GROUT.
2. REINFORCING SHALL BE PLACED 1 INCH CLEAR TO THE SIDE OF THE DOWELS.

BOND BEAMS

1. HORIZONTAL REINFORCING SHALL BE ¼ INCH CLEAR OF MASONRY FOR FINE GROUT AND ½ INCH FOR COARSE GROUT.
2. KNOCK OUT WEB BLOCKS SHALL BE USED FOR BLOCK AT THE TOP AND/OR THE BOTTOM OF THE BOND BEAMS, DEPENDING ON THE LOCATION.
3. WIRE MESH OR SOME OTHER MEANS SHALL BE USED TO PREVENT GROUT FROM ESCAPING FROM THE BOTTOM OF THE BOND BEAMS INTO CELLS WITHOUT VERTICAL REINFORCING.

GROUT

1. GROUT REQUIRED STRENGTH = 3,000 PSI MINIMUM.
2. REQUIRED SLUMP = 8 INCHES TO 11 INCHES.
3. PLACE GROUT WITHIN 1½ HOURS OF ADDING WATER AND PRIOR TO INITIAL SET.
4. CONFINE GROUT TO AREAS INDICATED.
5. LOW-LIFT GROUTING- DO NOT EXCEED 5 FEET IN HEIGHT.
6. GROUT CONSOLIDATION (BY RODDING) PUDDLING OR MECHANICAL VIBRATION - REINFORCING BAR PERMITTED FOR USE OF RODDING.
7. PROPORTION GROUT PER ASTM C476
8. GROUT SLUMP TEST PER ASTM C143.
9. AGGREGATE FOR MASONRY GROUT PER ASTM C-404.

PREPARATION

1. CONSTRUCT MASONRY WALL IN RUNNING BOND AS SHOWN ON THE PLANS U.O.N.
2. FILL CELLS OF MASONRY AS NOTED ON THE PLANS,ELEVATIONS, AND DETAILS.

REINFORCING INSTALLATION

1. SECURE REINFORCING A MAXIMUM HEIGHT OF 200 BAR DIAMETERS TO PREVENT DISPLACEMENT BEYOND ALLOWABLE TOLERANCES DURING GROUT PLACEMENT.
2. PLACING VERTICAL REINFORCING BAR BETWEEN THE HORIZONTAL REINFORCING AT BOND BEAM LOCATIONS MAY BE CONSIDERED AS SECURING THE REINFORCING AS REQUIRED.
3. COMPLETELY EMBED REINFORCING BARS IN GROUT MAINTAINING AT LEAST ¼" CLEAR FROM ANY FACE OF MASONRY OR FORMED SURFACE.
4. WHEN SPLICES OF REINFORCING ARE REQUIRED BARS SPLICED BY NON-CONTACT LAP SPLICES SHALL NOT BE SPACED MORE THAN 1/5 THE REQUIRED LAP LENGTH NOR MORE THAN 8" OR CONTACT LAP SPLICE MAINTAINING A MINIMUM OR A BAR DIAMETER OR 1" BETWEEN PARALLEL BARS (SEE ILLUSTRATION).
5. THE PLACEMENT OF REINFORCING IN WALLS AND FLEXURAL ELEMENTS SHALL BE WITHIN (+/-) ½" WHEN THE DISTANCE FROM THE CENTERLINE OF REINFORCING TO THE OPPOSITE FACE OF MASONRY IS 8" OR LESS AS ILLUSTRATED.
6. PLACE VERTICAL BARS WITHIN 2" OF THE REQUIRED LOCATION IN THE PLANE OF THE WALL AS ILLUSTRATED.

PROCEDURE FOR CONSTRUCTING MASONRY WALLS:

1. PLACE CMU TO POUR HEIGHT AS DETERMINED BY CONDITIONS AND SITUATIONS AS TO THE LOCATION OF BOND BEAMS AND FLOOR HEIGHTS.
2. CLEAN OUT ALL DEBRIS AND MORTAR AT THE CLEANOUT HOLE.
3. INSPECTOR SHALL INSPECT ALL CELLS TO BE GROUTED TO ENSURE HERE IS NO MORTAR PROTRUDING FROM JOINTS THAT WOULD PREVENT THE GROUT BUILDING UP AND CREATING A BLOCKAGE.
4. INSTALL REINFORCING IN CELL AND TIE IN PLACE TO DOWEL AT THE CLEANOUT. POSITION BAR AT LEAST ¾" FROM THE DOWEL IN THE HORIZONTAL OR IN PLANE DIRECTION.
5. INSPECTOR IS TO VERIFY THAT REINFORCING IS TIED IN PLACE.
6. INSTALL GROUT TO THE 60" HEIGHT AND THEN MOVE TO THE NEXT CELL AND FILL TO 60" AND SO ON.
7. ONCE ALL CELLS ARE FILLED TO 60" THEN PROCEED TO FILL THE CELLS ANOTHER 60" UNTIL THE POUR HEIGHT IS ACHIEVED.

QUALITY ASSURANCE

PER ACI 530.1 PROVIDE LEVEL B QUALITY ASSURANCE AS NOTED IN TABLE 4.

ACI 530 REFERENCES

ACI 1.12.3.1 - THE CLEAR DISTANCE BETWEEN PARALLEL BARS SHALL NOT BE LESS THAN THE NOMINAL DIAMETER OF THE BARS, NOR LESS THAN 1 IN.

ACI 1.12.3.3 - THE CLEAR DISTANCE LIMITATIONS BETWEEN BARS SHALL ALSO APPLY TO THE CLEAR DISTANCE BETWEEN A CONTACT LAP SPLICE AND ADJACENT SPLICES OR BARS.

ACI 1.12.3.5 - REINFORCEMENT EMBEDDED IN GROUT SHALL HAVE A THICKNESS OF GROUT BETWEEN THE REINFORCEMENT AND MASONRY UNITS NOT LESS THAN ¼ IN. (6.4MM) FOR FINE GROUT OR ½ IN. (12.7MM) FOR COARSE GROUT.

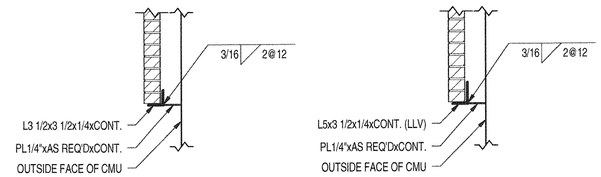

OPENINGS LESS THAN 6'-4"
MIN. BRG. 8" EACH END

OPENINGS MORE THAN 6'-4"
MIN. BRG. 8" EACH END

STEEL LINTELS FOR BRICK SUPPORT
3/4" = 1'-0"

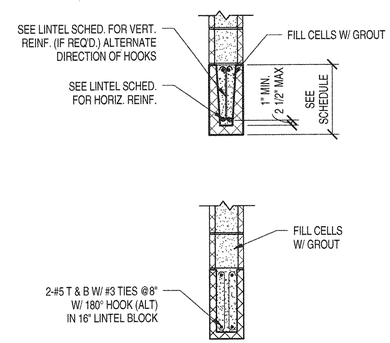

MASONRY LINTEL DETAILS
3/4" = 1'-0"

MASONRY LINTEL SCHEDULE			
MARK	LINTEL	JAMB REINF.	NOTES
L1	8" DEEP LINTEL W/ 2-#5 BOTTOM	SEE PLAN	AT MASONRY OPENINGS LESS THAN 4'-0" WIDE (UON)
L2	16" DEEP LINTEL W/ 2-#5 TOP & BOTTOM & #3 TIES W/ 180° HOOKS (ALT)	SEE PLAN	AT MASONRY OPENINGS BETWEEN 4'-0" WIDE AND 6'-8" WIDE

NOTES:
1. EXTEND LINTEL REINF. 2'-0" BEYOND OPENING.
2. MASONRY LINTEL WIDTH SHALL MATCH WALL WIDTH (I.E. 7 5/8" WIDE LINTEL AT 7 5/8" CMU WALLS)
3. SEE ARCH. DRAWINGS FOR SIZE AND LOCATION OF OPENINGS.
4. SEE "LINTEL DETAIL", THIS SHEET, FOR PLACEMENT OF LINTEL REINF.
5. VERTICAL JAMB REINF. SHALL EXTEND THE FULL HEIGHT OF THE WALL.
6. SUBMIT SHOP DWGS OF PRECAST LINTELS FOR APPROVAL PRIOR TO FABRICATION.

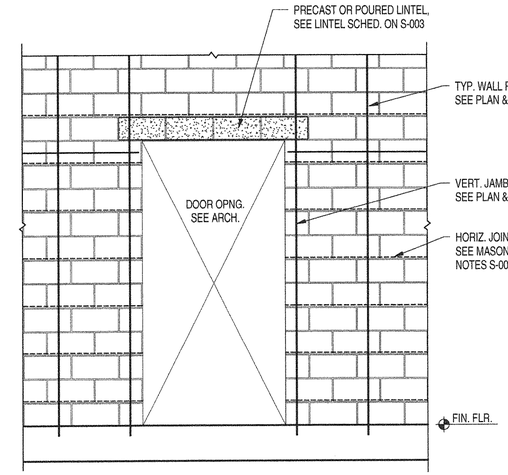

CMU WALL REINF @ OPENINGS
1/2" = 1'-0"

MASONRY LAP SCHEDULE	
BAR #	LAP LENGTH
3	27"
4	36"
5	45"
6	54"

MASONRY LAP SCHEDULE
3/4" = 1'-0"

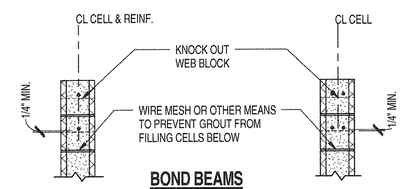

BOND BEAMS

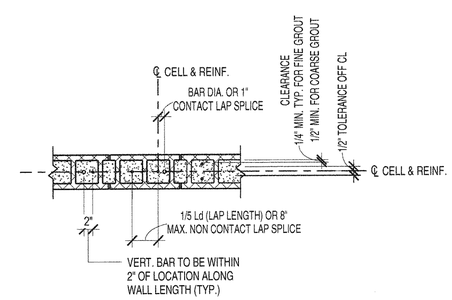

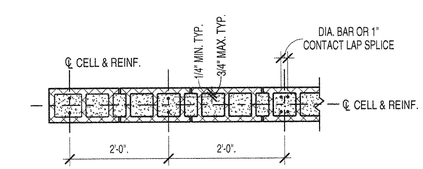

1-#5 EACH FACE

MASONRY TOLERANCES
3/4" = 1'-0"

HASKELL ARCHITECTS and ENGINEERS, P.A.
NORTH CAROLINA - Architecture # 51202, Engineering # C-2135
HASKELL®
America's Design-Build Leader®
The Haskell Company
111 Riverside Avenue
Jacksonville, Florida 32202
Phone # (904) 791-4500
MATTHEW R. HAMANN, P.E.
STRUCTURAL ENGINEER

MARINE CORP AIR STATION CHERRY POINT
RECREATIONAL VEHICLE PARK
CHERRY POINT, NORTH CAROLINA

DATE	ISSUE/REVISION
6/11/12	FINAL CD
6/4/12	CI

We hereby expressly reserve the property rights to this drawing and it is not to be reproduced or copied in any format or manner whatsoever without first obtaining our express written permission and consent.

DRAWN BY: SGF
CHECKED BY: MRH
AE JOB NUMBER: 6601490

GENERAL STRUCTURAL NOTES (3 OF 3)

S-003
SHEET NUMBER

C:\Revit_Local\6601490201\6601490AM(BATHHOUSE)-sgfairfax.RVT 6/7/2012 4:20:39 PM

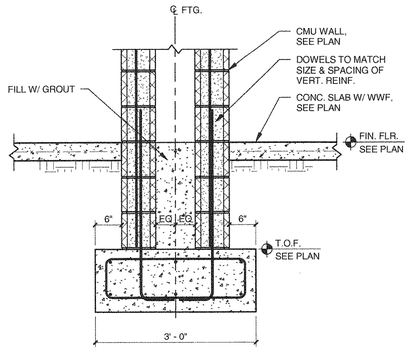

C1 SECTION AT DBL. CMU WALLS

Section 3/4" = 1'-0"

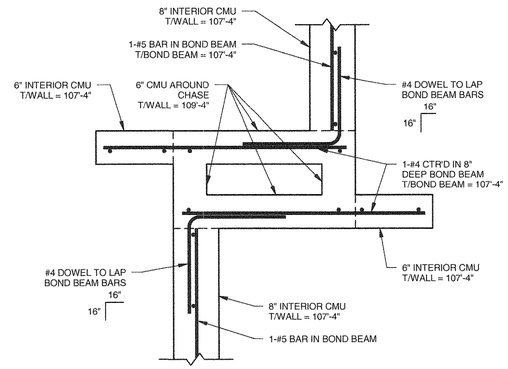

NOTE:
ALL 6" CMU TO BE FILLED SOLID.

C2 8" INT. WALL TO 6" INT. WALL CONN.

Section 1" = 1'-0"

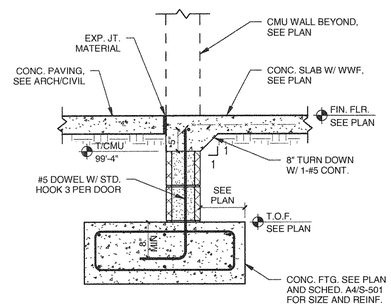

B1 SECTION AT DOOR

Section 3/4" = 1'-0"

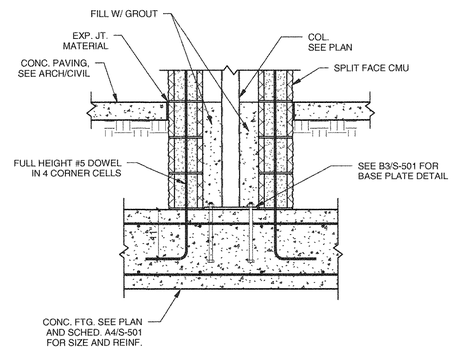

B2 STEEL COLUMN TO FTG.

Section 3/4" = 1'-0"

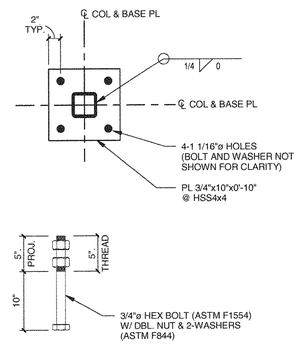

B3 BASE PLATE & ANCHOR BOLT DETAIL

Section 1" = 1'-0"

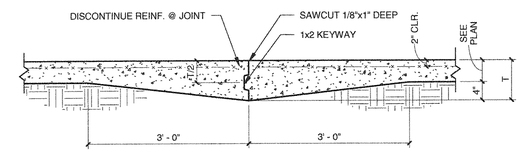

CONSTRUCTION JOINT

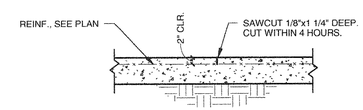

CONTRACTION JOINT (C.J.)

B4 SLAB JOINT DETAILS

Section 3/4" = 1'-0"

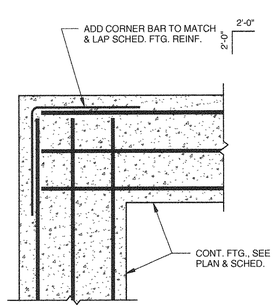

A1 FOOTING CORNER REINFORCING

Section 3/4" = 1'-0"

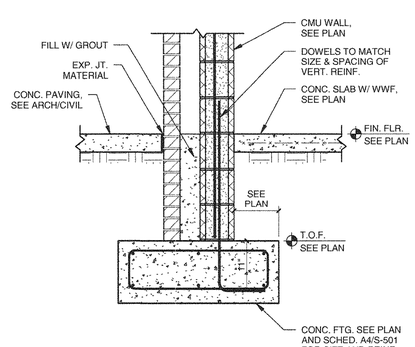

A2 TYP. EXT. BEARING CMU WALL

Section 3/4" = 1'-0"

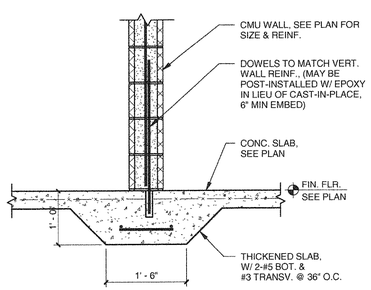

A3 TYP. INT. CMU WALL

Section 3/4" = 1'-0"

FOOTING SCHEDULE

MARK	SIZE	REINFORCING
F4.0	4'-0"x4'-0"x1'-4" THICK	4-#5 E.W. T&B
F6.0	6'-0"x6'-0"x1'-6" THICK	8-#5 E.W. T&B
CF3.0	3'-0"xCONT.x1'-2" THICK	3-#5 CONT. T&B W/ #3 TIES @ 36" O.C.

A4 FOOTING SCHEDULE

Section 3/4" = 1'-0"

MATTHEW R. HAMANN, P.E.
STRUCTURAL ENGINEER
NC LIC. # 040843

HASKELL ARCHITECTS and ENGINEERS, P.A.
NORTH CAROLINA - Architecture # 51202, Engineering # C-2136
HASKELL
America's Design-Build Leader®
The Haskell Company
111 Riverside Avenue
Jacksonville, Florida 32202
Phone # (904) 791-4500

MARINE CORP AIR STATION CHERRY POINT

RECREATIONAL VEHICLE PARK

CHERRY POINT, NORTH CAROLINA

DATE	ISSUE/REVISION
6/11/12	FINAL CD
6/4/12	CI
4/9/12	OPT. 2_95%
7/14/11	QDP
7/1/11	PR

We hereby expressly reserve the property rights to this drawing and it is not to be reproduced or copied in any format or manner whatsoever without first obtaining our express written permission and consent.

DRAWN BY: SGF
CHECKED BY: MRH

AE JOB NUMBER
6601490

FOUNDATION SECTIONS & DETAILS

S-510
SHEET NUMBER

C:\Revit_Local\6601490201\6601490AM(BATHHOUSE)-vgtlarfax.RVT 6/7/2012 4:20:43 PM

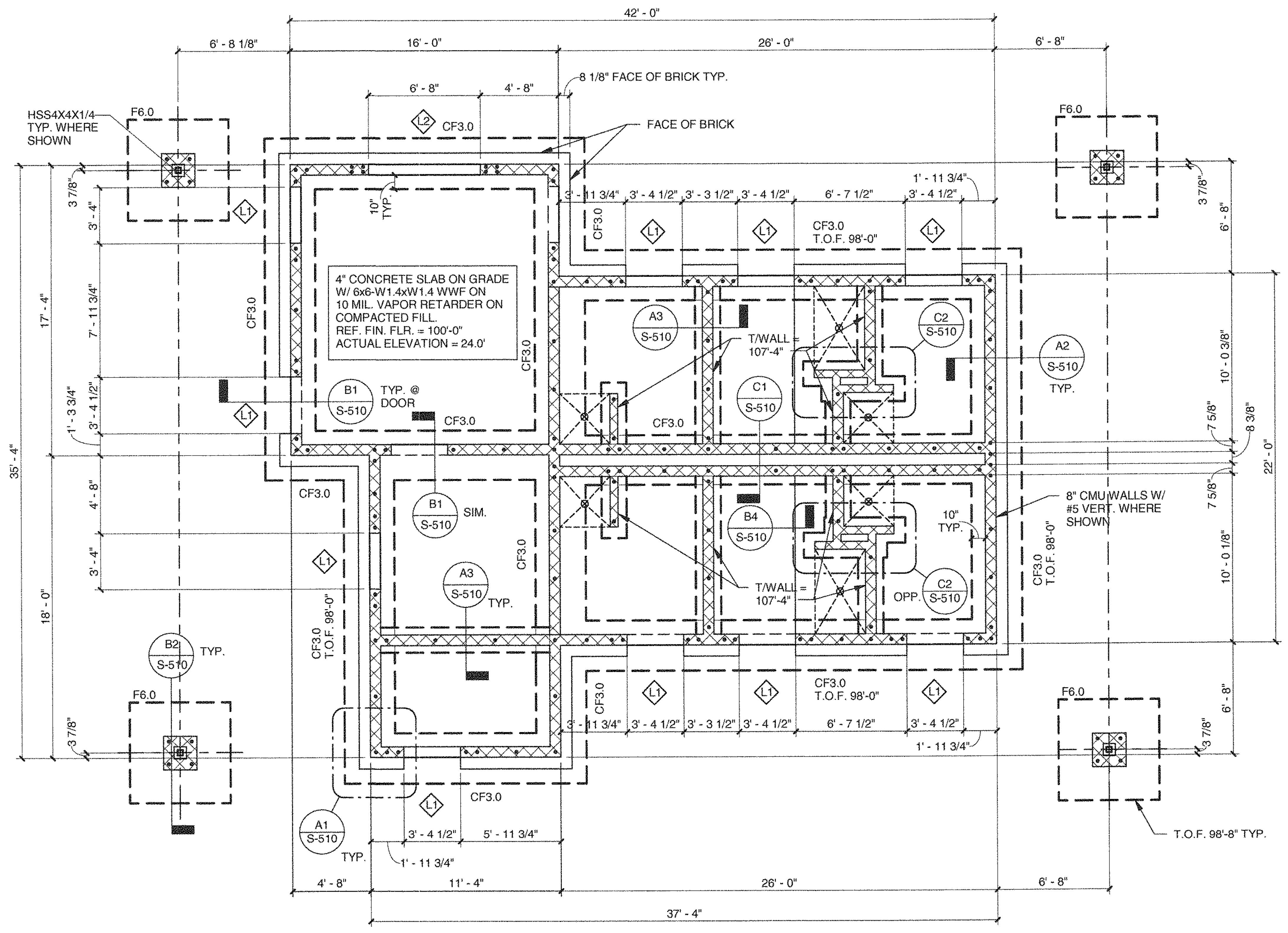

FOUNDATION PLAN

3/16" = 1'-0"

TRUE NORTH
PLAN NORTH

NOTES:
1. FOR GENERAL NOTES, SEE S-001 & S-002.
2. FOR MASONRY NOTES SEE S-003.
3. FOR FOOTING SCHEDULE, SEE A4/S-510.
4. FOR FOUNDATION SECTIONS & DETAILS, SEE S-510.
5. FOR INTERIOR WALL LOCATIONS & DIMENSIONS, SEE ARCH. DWGS.
6. FOR SLAB FINISHES, SEE ARCH. DWGS.
7. FOR ADDITIONAL INFORMATION REGARDING FLOOR SLOPES, DEPRESSIONS, RECESSES, & DRAIN LOCATIONS, SEE ARCH. AND/OR PLUMBING DWGS.
8. FOR MASONRY LINTEL SCHEDULE, SEE S-003.
9. INDICATES 1-#5 CTR'D.
   INDICATES #5 E.F.
10. (L#) INDICATES LINTEL ABOVE OPENING, SEE SHEET S-003 FOR LINTEL SCHEDULE.

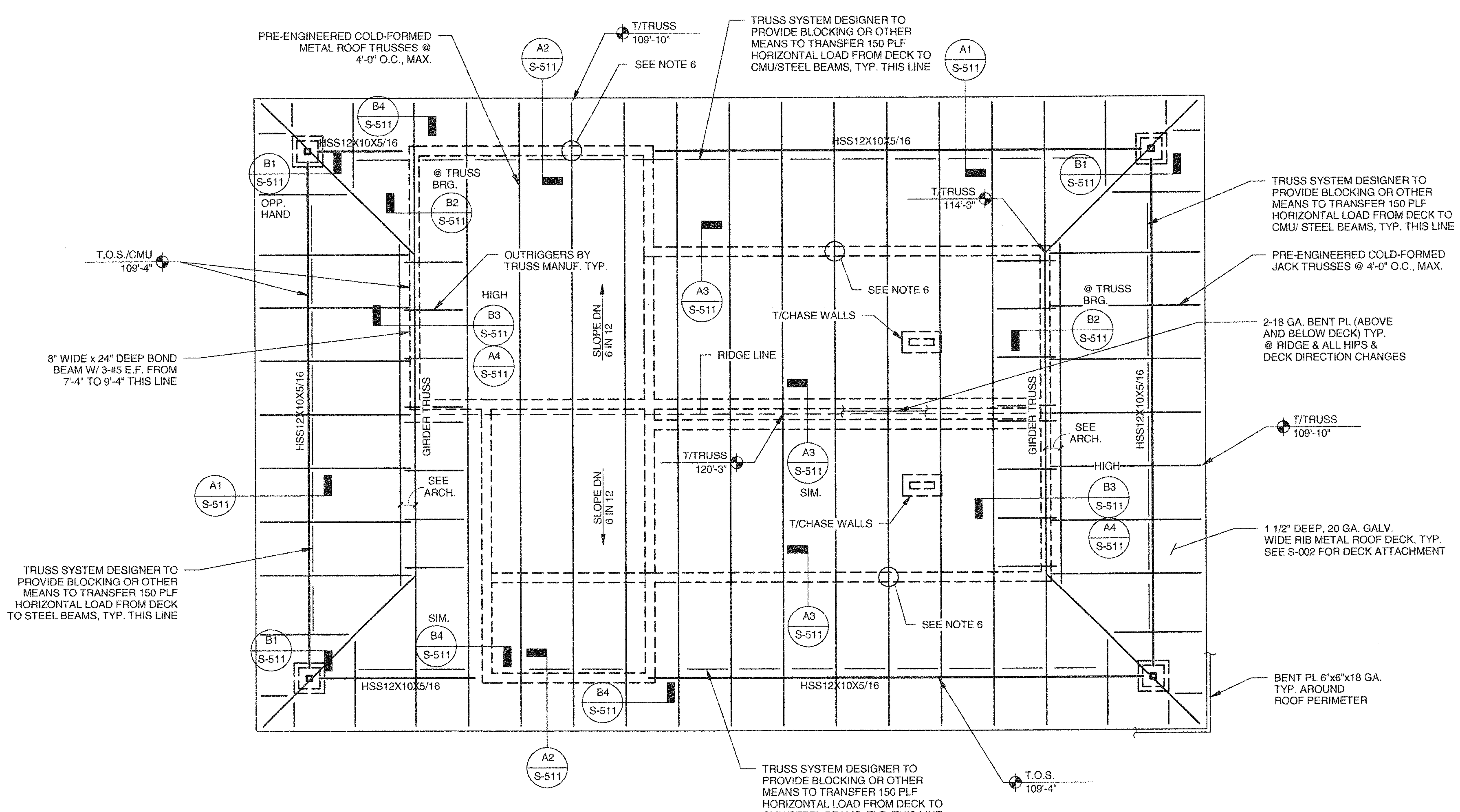

ROOF FRAMING PLAN

3/16" = 1'-0"

TRUE NORTH
PLAN NORTH

NOTES:
1. FOR GENERAL NOTES, SEE S-001 & S-002.
2. FOR ROOF WIND PRESSURES, SEE S-002.
3. VERIFY ALL ROOF SLOPES AND ELEVATIONS W/ ARCH.
4. FOR MASONRY LINTEL SCHEDULE, SEE S-003.
5. SEE S-001, "TRUSS SYSTEM DESIGN NOTES" FOR TRUSS SYSTEM DESIGN AND SUBMITTAL REQUIREMENTS.
6. AT ALL STEEL TRUSSES BEARING ON PERPENDICULAR EXTERIOR WALLS, TRUSS MANUF. IS TO PROVIDE CONNECTION TO BEARING PLATE WITH SUFFICIENT CAPACITY TO RESIST A 925# HORIZONTAL WIND LOAD AND TRUSS MUST TRANSFER A 650# HORIZONTAL WIND LOAD FROM BOTTOM CHORD TO TOP CHORD.
7. TRUSS LABELED "GIRDER TRUSS" MUST BE DESIGNED TO TRANSFER 300 PLF FROM TOP CHORD TO BOTTOM CHORD.
8. SEE S-002, NOTE 7, FOR SOFFIT DESIGN WIND PRESSURES.
9. TRUSS MANUF. TO COORDINATE GABLE END TRUSSES W/ LOUVER PROFILES.
10. PROVIDE FASTENERS FOR PLYWOOD TO STEEL DECK ATTACHMENT CAPABLE OF RESISTING WIND LOADS PER SHEET S-002.

MATTHEW R. HAMANN, P.E.
STRUCTURAL ENGINEER

HASKELL ARCHITECTS and ENGINEERS, P.A.
NORTH CAROLINA - Architecture # 51202, Engineering # C-2136

HASKELL
America's Design-Build Leader®
The Haskell Company
111 Riverside Avenue
Jacksonville, Florida 32202
Phone # (904) 791-4500

MARINE CORP AIR STATION CHERRY POINT
RECREATIONAL VEHICLE PARK
CHERRY POINT, NORTH CAROLINA

DATE	ISSUE/REVISION
6/11/12	FINAL CD
6/4/12	CI
4/9/12	OPT. 2_95%
7/14/11	QDP
7/1/11	PR

We hereby expressly reserve the property rights to this drawing and it is not to be reproduced or copied in any format or manner whatsoever without first obtaining our express written permission and consent.

DRAWN BY:	CHECKED BY:
SGF	MRH

AE JOB NUMBER
6601490

BATH HOUSE & LAUNDRY FOUNDATION & FRAMING PLANS

S-110
SHEET NUMBER

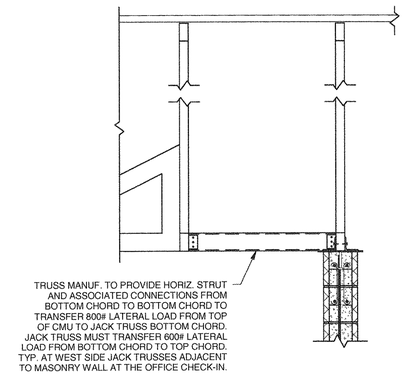

C4 HORIZONTAL STRUT CONN.
Section 3/4" = 1'-0"

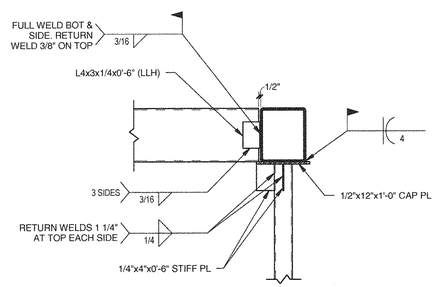

B1 TUBE TO COLUMN CONN.
Section 3/4" = 1'-0"

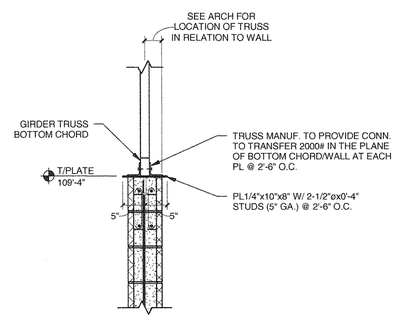

B2 TRUSS CONN. TO SHEAR WALL
Section 3/4" = 1'-0"

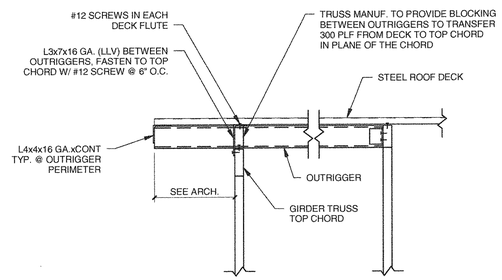

B3 SECTION AT OUTRIGGER
Section 3/4" = 1'-0"

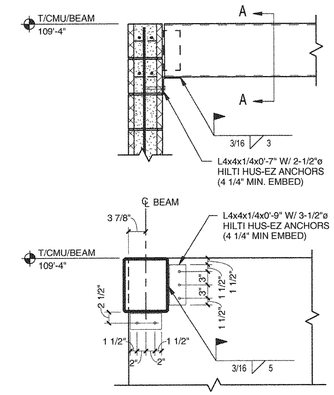

B4 HSS BEAM TO CMU CONN.
Section 3/4" = 1'-0"

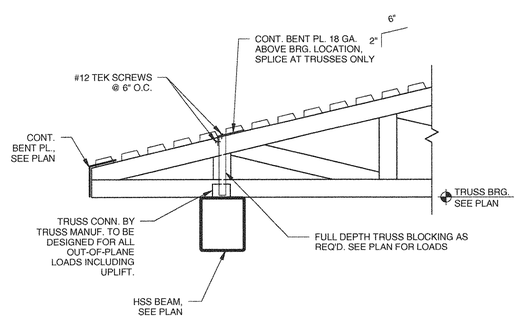

A1 TRUSS CONN. TO STEEL BEAM
Section 3/4" = 1'-0"

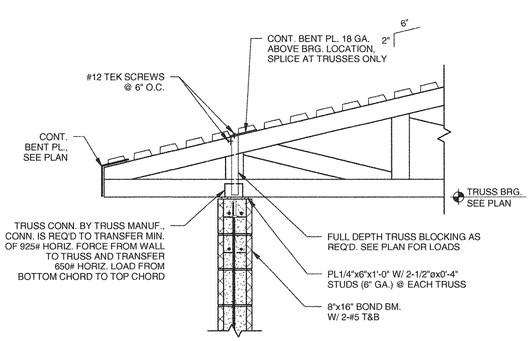

A2 TRUSS CONN. TO EXT. CMU WALL
Section 3/4" = 1'-0"

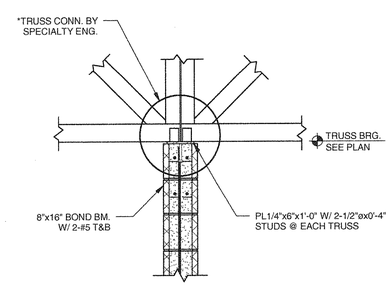

* SEE NOTE 6 ON ROOF FRAMING PLANS FOR ADDITIONAL DESIGN REQUIREMENTS AT EXTERIOR WALLS.

A3 TRUSS CONN. TO INT. CMU WALL
Section 3/4" = 1'-0"

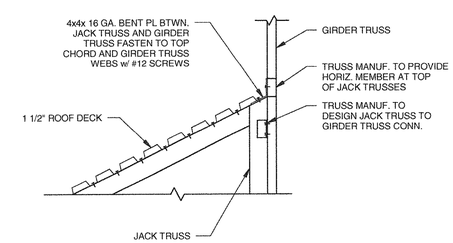

A4 CONN. @ TOP OF JACK TRUSS
Section 3/4" = 1'-0"

MATTHEW R. HAMANN, P.E.
STRUCTURAL ENGINEER
REG. NO. FL 66490
HASKELL ARCHITECTS and ENGINEERS, P.A.
NORTH CAROLINA - Architecture # 51202, Engineering # C-2136
The Haskell Company
111 Riverside Avenue
Jacksonville, Florida 32202
Phone # (904) 791-4500
HASKELL®
America's Design-Build Leader

MARINE CORP AIR STATION CHERRY POINT

RECREATIONAL VEHICLE PARK

CHERRY POINT, NORTH CAROLINA

DATE	ISSUE/REVISION
6/11/12	FINAL CD
6/4/12	CI

We hereby expressly reserve the property rights to this drawing and it is not to be reproduced or copied in any format or manner whatsoever without first obtaining our express written permission and consent.

DRAWN BY: SGF
CHECKED BY: MRH

AE JOB NUMBER
6601490

ROOF FRAMING SECTIONS & DETAILS

S-511
SHEET NUMBER

C:\Revit_Local\6601490201\6601490AM(BATHHOUSE)-sgfarifax.RVT 6/7/2012 4:20:45 PM

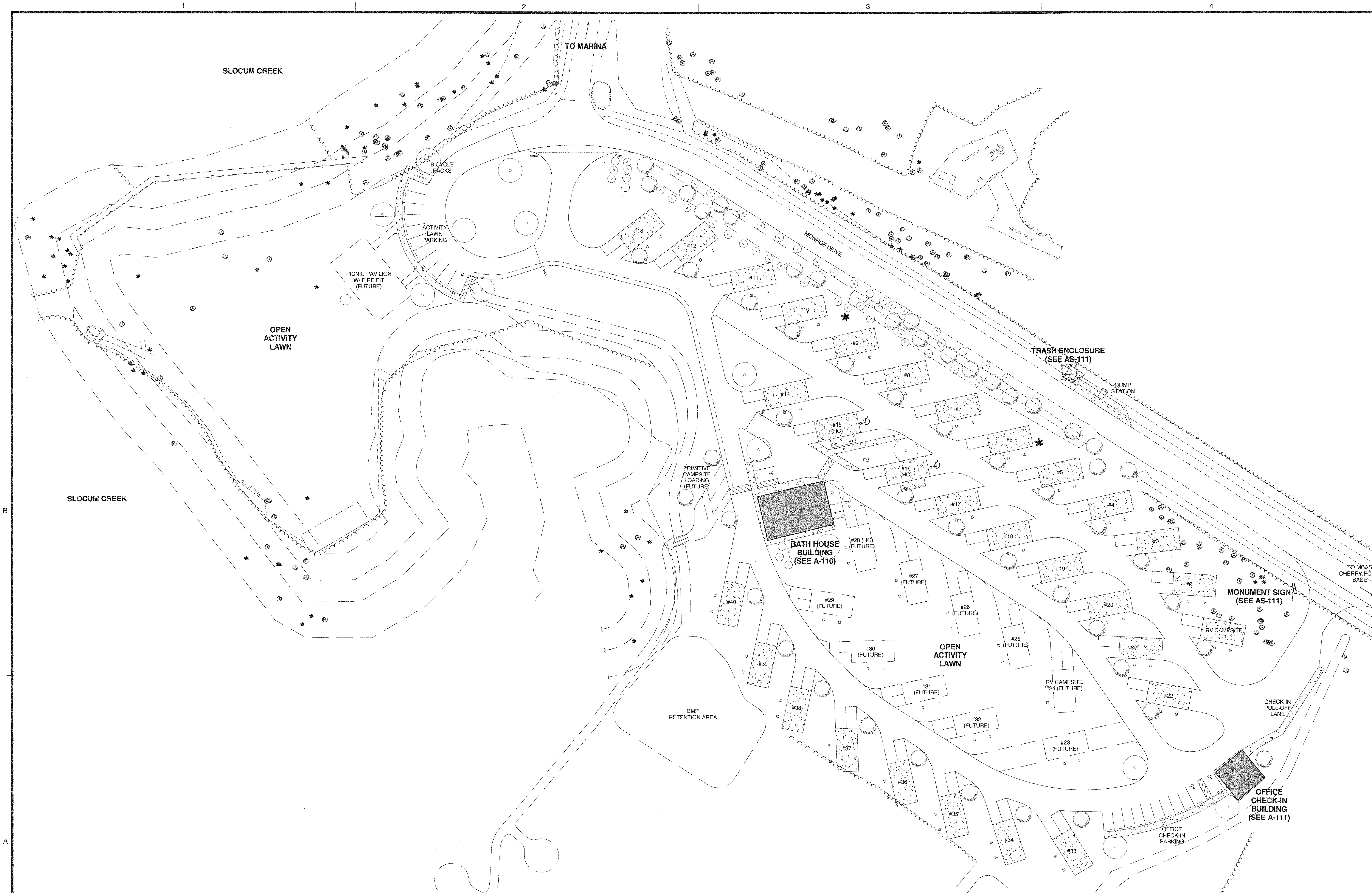

NOTES:
1. FOR TYPICAL RV SITE LAYOUT - SEE CIVIL DETAIL 8 ON C-511)
2. FOR RV SITE PEDESTAL DESIGN - SEE ELECTRICAL DETAIL B3 ON E-503

A ARCHITECTURAL SITE PLAN

1" = 40'-0"

CHRISTIAN W. KUHN III, AIA
PROJECT PRINCIPAL

HASKELL ARCHITECTS and ENGINEERS, P.A.
NORTH CAROLINA - Architecture # 51202, Engineering # C-2136

HASKELL

The Haskell Company
111 Riverside Avenue
Jacksonville, Florida 32202
Phone # (904) 791-4500

MARINE CORPS AIR STATION CHERRY POINT

RECREATIONAL VEHICLE PARK

CHERRY POINT, NORTH CAROLINA

DATE	ISSUE/REVISION
6/11/12	FINAL CD
6/4/12	CI

We hereby expressly reserve the property rights to this drawing and it is not to be reproduced or copied in any format or manner whatsoever without first obtaining our express written permission and consent.

DRAWN BY	CHECKED BY
MED	CWK

HE JOB NUMBER
6601490

ARCHITECTURAL SITE PLAN

AS-110
SHEET NUMBER

6/6/2012 9:00:39 AM
c:\Revit_Local\6601490AM(BATHHOUSE)-medahibe.RVT

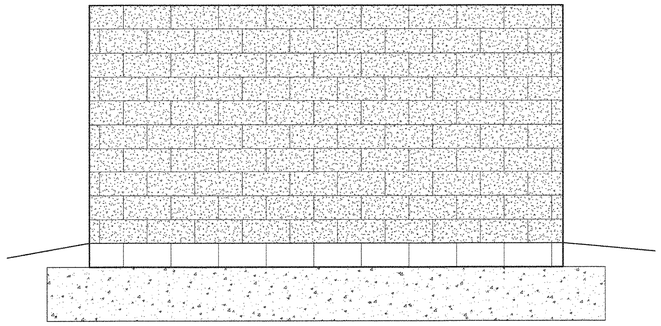

1 TRASH ENCLOSURE - NORTH ELEVATION
1/2" = 1'-0"

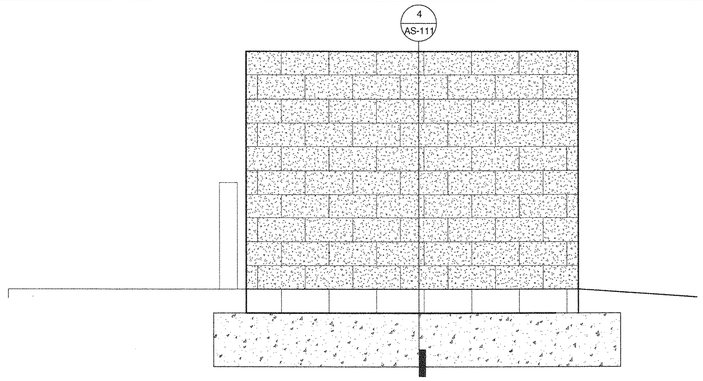

3 TRASH ENCLOSURE - EAST/WEST ELEVATIONS
1/2" = 1'-0"

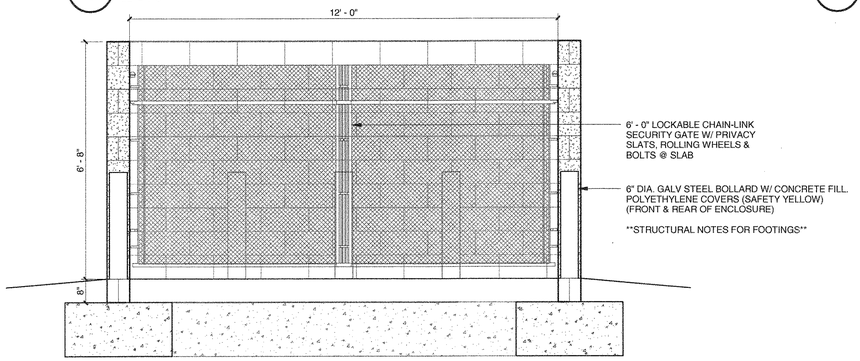

2 TRASH ENCLOSURE - SOUTH ELEVATION
1/2" = 1'-0"

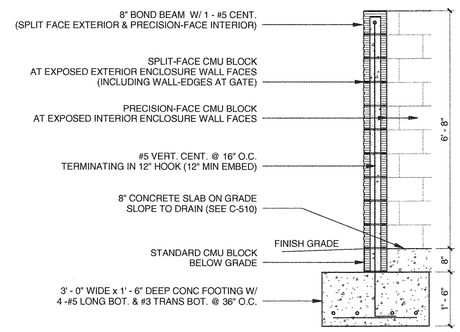

4 TRASH ENCLOSURE - WALL SECTION
1/2" = 1'-0"

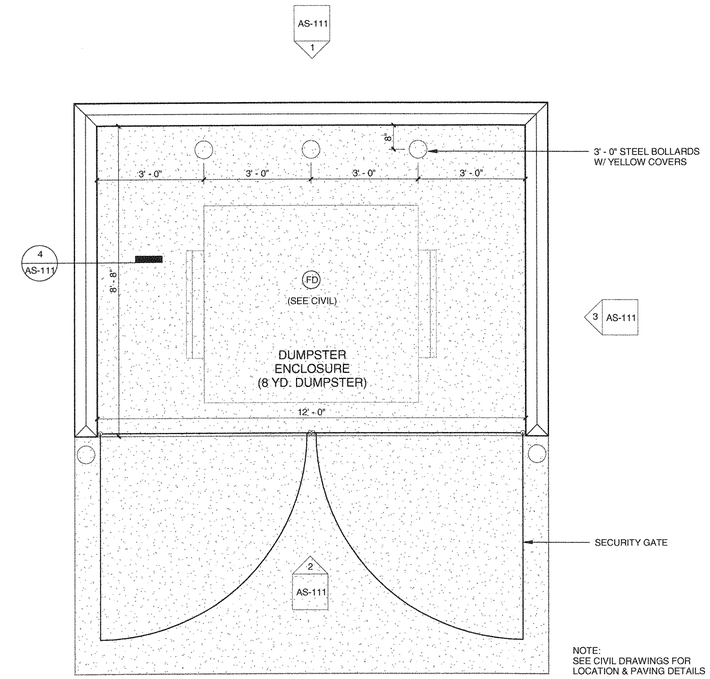

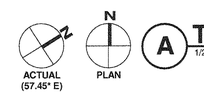

A TRASH ENCLOSURE PLAN
1/2" = 1'-0"

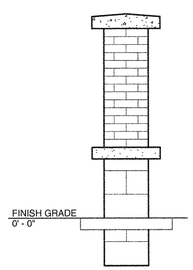

5 MONUMENT SIGN - NORTH/SOUTH ELEVATIONS
1/2" = 1'-0"

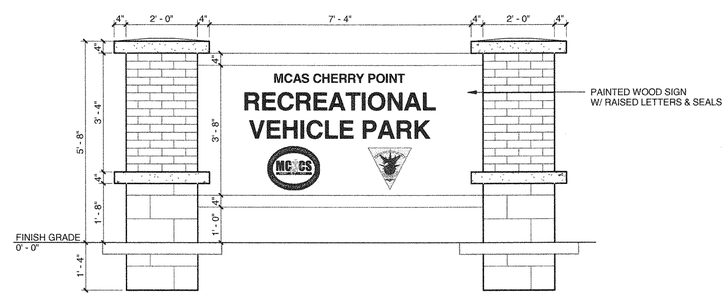

7 MONUMENT SIGN - EAST ELEVATION
1/2" = 1'-0"

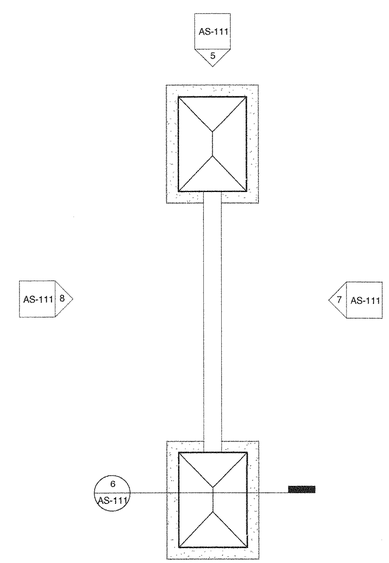

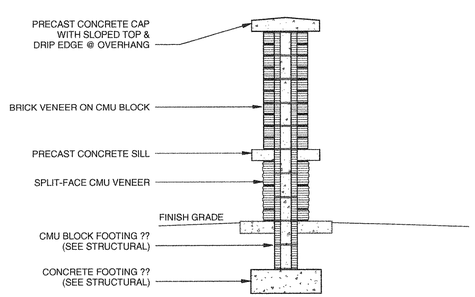

6 MONUMENT SIGN - SECTION
1/2" = 1'-0"

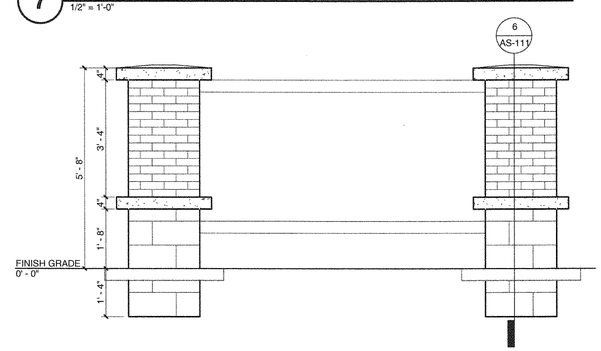

8 MONUMENT SIGN - WEST ELEVATION
1/2" = 1'-0"

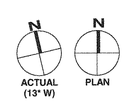

B MONUMENT SIGN PLAN
1/2" = 1'-0"

CHRISTIAN W. KUHN III, AIA
PROJECT PRINCIPAL
Reg. No. 3400
6-11-12

HASKELL ARCHITECTS and ENGINEERS, P.A.
NORTH CAROLINA - Architecture # 51202, Engineering # C-2136
HASKELL®
The Haskell Company
111 Riverside Avenue
Jacksonville, Florida 32202
Phone # (904) 791-4500

MARINE CORPS AIR STATION CHERRY POINT

RECREATIONAL VEHICLE PARK

CHERRY POINT, NORTH CAROLINA

DATE	ISSUE/REVISION
6/11/12	FINAL CD
6/4/12	CI

We hereby expressly reserve the property rights to this drawing and it is not to be reproduced or copied in any format or manner whatsoever without first obtaining our express written permission and consent.

DRAWN BY: MED
CHECKED BY: CWK
AE JOB NUMBER: 6601490

ARCHITECTURAL SITE PLAN DETAILS

AS-111
SHEET NUMBER

6/6/2012 9:00:41 AM
c:\Revit_Local\6601490AM(BATHHOUSE)-mediahbe.RVT

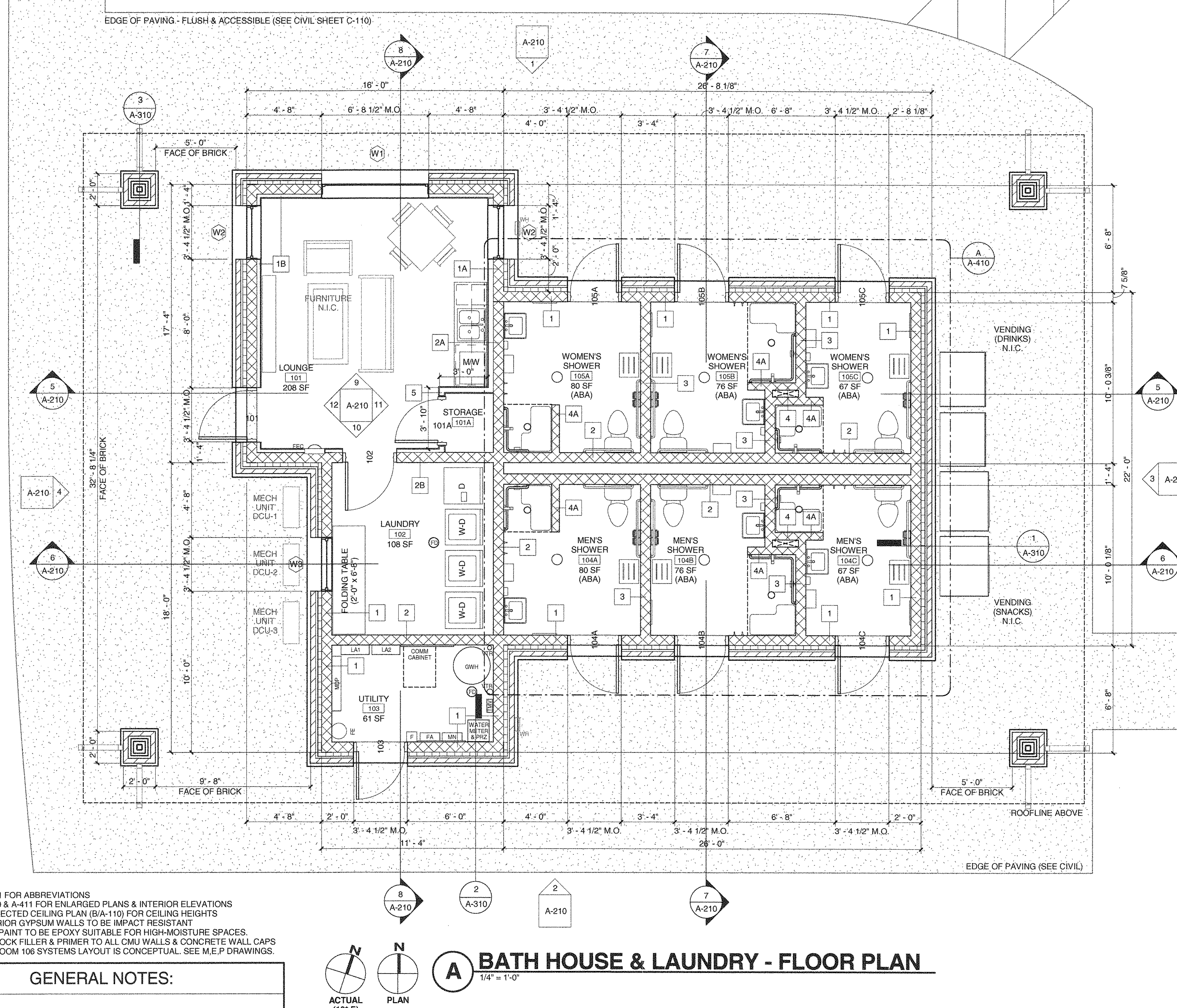

A BATH HOUSE & LAUNDRY - FLOOR PLAN

1/4" = 1'-0"

NOTES:

1. SEE G-001 FOR ABBREVIATIONS
2. SEE A-410 & A-411 FOR ENLARGED PLANS & INTERIOR ELEVATIONS
3. SEE REFLECTED CEILING PLAN (B/A-110) FOR CEILING HEIGHTS
4. ALL INTERIOR GYPSUM WALLS TO BE IMPACT RESISTANT
5. ALL CMU PAINT TO BE EPOXY SUITABLE FOR HIGH-MOISTURE SPACES. APPLY BLOCK FILLER & PRIMER TO ALL CMU WALLS & CONCRETE WALL CAPS
6. UTILITY ROOM 106 SYSTEMS LAYOUT IS CONCEPTUAL. SEE M,E,P DRAWINGS.

GENERAL NOTES:

1. THESE DRAWINGS ARE NOT TO BE SCALED. REFER TO DIMENSIONS INDICATED ON DIMENSION PLANS, SHOP DRAWINGS, OR ESTABLISHED FIELD DIMENSIONS. WHERE NO DIMENSIONS OR METHOD OF DETERMINING A LOCATION IS GIVEN, VERIFY WITH ARCHITECT PRIOR TO PROCEEDING.
2. DIMENSIONS ARE TO CENTERLINE OF COLUMN, OUTSIDE FACE OF MASONRY OR FACE OF STUD TYPICAL UNLESS OTHERWISE NOTED.
3. DIMENSIONS INDICATED TO BE "CLEAR" SHALL HAVE A MINIMUM DIMENSION OF FACE TO FACE OF FINISH MATERIALS.
4. VERIFY EQUIPMENT REQUIREMENTS FOR ROUGH-IN AND CONNECTIONS PRIOR TO CONSTRUCTION TO ASSURE PROPER BLOCKING, INSTALLATION, OPENINGS AND UTILITY CONNECTIONS.
5. VERIFY EQUIPMENT & ACCESSORY REQUIREMENTS FOR ROUGH-IN AND UTILITY CONNECTIONS PRIOR TO CONSTRUCTION TO ASSURE THA PROPER BLOCKING, OPENINGS, AND UTILITY CONNECTIONS ARE PROVIDED.
6. IN ALL CONTINUOUS, UNINTERRUPTED GYPSUM & CEMENT BOARD CEILINGS, PROVIDE CONTROL JOINTS AT INTERVALS SPECIFIED (BUT NOT GREATER THAN 30 FEET). VERIFY LOCATIONS WITH ARCHITECT PRIOR TO PROCEEDING.
7. PROVIDE PROPER SEPARATION BETWEEN ALL DISSIMILAR MATERIALS.
8. EQUIPMENT SHOWN WITH DASHED-DOT LINES IS EQUIPMENT NOT IN CONTRACT AND FURNISHED BY THE OWNER. REFER TO OWNER FURNISHED EQUIPMENT BOOK FOR SOME EQUIPMENT THAT REQUIRES UTILITY CONNECTIONS IN CONTRACT.
9. FURNITURE IS SHOWN IN DASHED LINES FOR LAYOUT AND COORDINATION PURPOSES. ALL FURNITURE IS PART OF A SEPARATE CONTRACT AND IS FURNISHED BY THE OWNER.
10. ALL ITEMS MARKED "NIC" (NOT IN CONTRACT) ARE TO BE FURNISHED AND INSTALLED BY OWNER/TENANT UNDER A SEPARATE CONTRACT.
11. COORDINATE PLACEMENT OF DIFFUSERS, LIGHTS, SIGNAGE & FIRE ALARM HORN STROBES WITH ARCHITECT BEFORE INSTALLATION.

ROOM FINISH SCHEDULE

NUMBER	ROOM NAME	AREA	FLOOR	BASE	NORTH	EAST	SOUTH	WEST	CEILING MATERIAL	COMMENTS
101	LOUNGE	208 SF	VCT-1	RB-1	PT GYP-1	PT GYP-1	PT GYP-1	PT GYP-1	2x2 ACT	
101A	STORAGE	11 SF	VCT-1	RB-1	PT GYP-1	PT GYP-1	PT GYP-1	PT GYP-1	PT GYP-3	
102	LAUNDRY	108 SF	VCT-1	RB-1	PT CMU-2	PT CMU-2	PT CMU-2	PT CMU-2	PT GYP-3	
103	UTILITY	61 SF	C/S	-	PT CMU-2	PT CMU-2	PT CMU-2	PT CMU-2	PT GYP-3	
104A	MEN'S SHOWER	80 SF	C/S/S-1	-	PT CMU-2	PT CMU-2	PT CMU-2	PT CMU-2	PT GYP-3	
104B	MEN'S SHOWER	76 SF	C/S/S-1	-	PT CMU-2	PT CMU-2	PT CMU-2	PT CMU-2	PT GYP-3	
104C	MEN'S SHOWER	67 SF	C/S/S-1	-	PT CMU-2	PT CMU-2	PT CMU-2	PT CMU-2	PT GYP-3	
105A	WOMEN'S SHOWER	80 SF	C/S/S-1	-	PT CMU-2	PT CMU-2	PT CMU-2	PT CMU-2	PT GYP-3	
105B	WOMEN'S SHOWER	76 SF	C/S/S-1	-	PT CMU-2	PT CMU-2	PT CMU-2	PT CMU-2	PT GYP-3	
105C	WOMEN'S SHOWER	67 SF	C/S/S-1	-	PT CMU-2	PT CMU-2	PT CMU-2	PT CMU-2	PT GYP-3	
110	OFFICE	61 SF	VCT-1	RB-1	PT CMU-2	PT CMU-2 / PT GYP-1	PT CMU-2 / PT GYP-1	PT CMU-2	2x2 ACT	
111	RESTROOM	42 SF	VCT-1	RB-1	PT GYP-1	PT CMU-2	PT GYP-1	PT GYP-1	PT GYP-3	MOISTURE-RESISTANT GYP BD
112	STORAGE	37 SF	C/S	-	PT CMU-2	PT CMU-2	PT CMU-2	PT CMU-2	PT GYP-3	
113	UTILITY	48 SF	C/S	-	PT CMU-2	PT CMU-2	PT CMU-2	PT CMU-2	PT GYP-3	

COLOR LEGEND:

- PT-1 = TO BE DETERMINED (TAN-COLOR EGGSHELL FINISH)
- PT-2 = TO BE DETERMINED (TAN-COLOR EPOXY PAINT)
- PT-3 = TO BE DETERMINED (WHITE-COLOR EGGSHELL FINISH)
- RB-1 = TO BE DETERMINED (HUNTER GREEN)
- VCT-1 = TO BE DETERMINED (COTTAGE TAN)
- C/S/S-1 = STAINED & SEALED CONCRETE (MEDIUM BROWN)

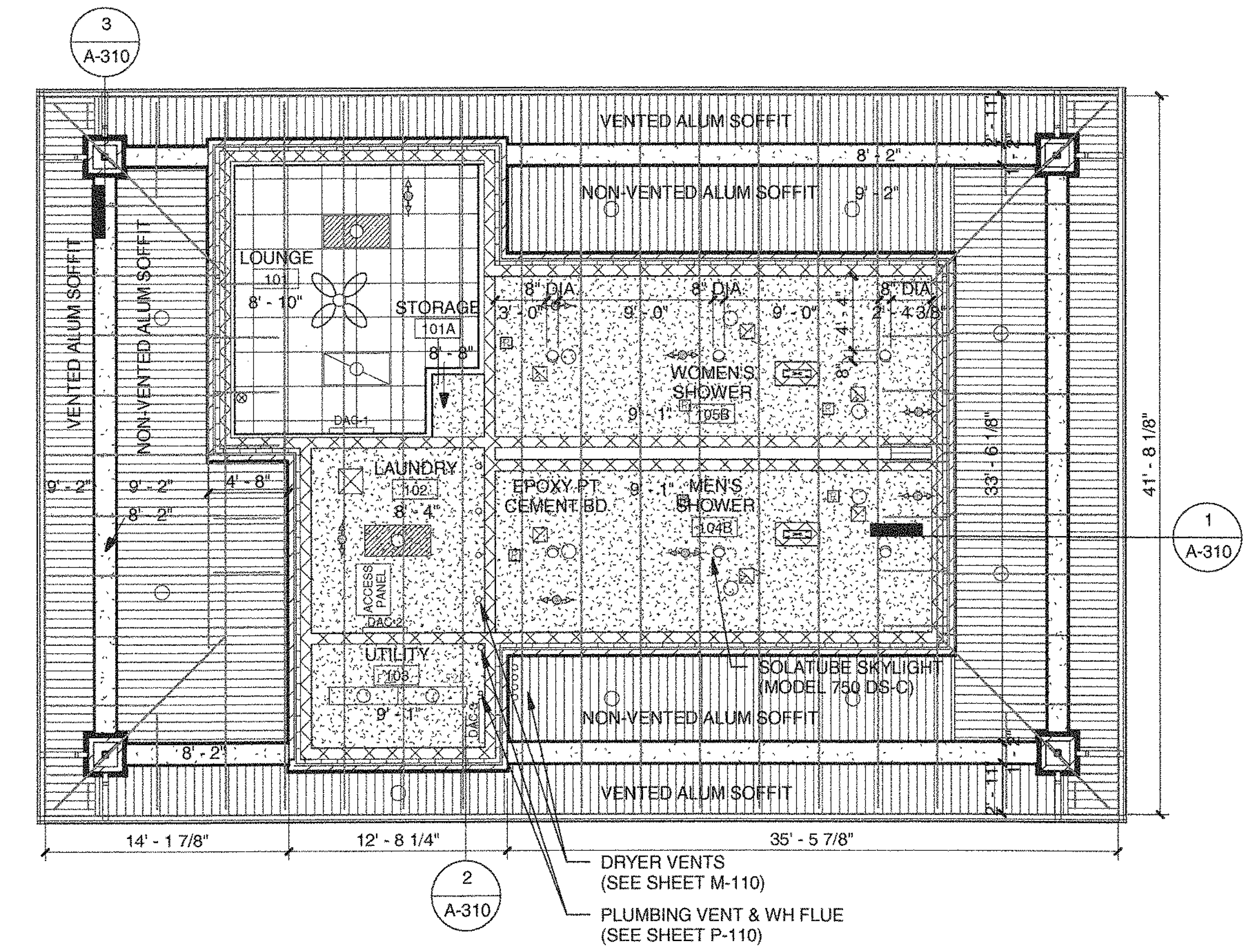

B REFLECTED CEILING PLAN

1/8" = 1'-0"

REFLECTED CEILING PLAN LEGEND

SEE M, P, & E DRAWINGS FOR COMPLETE DISCIPLINE LEGENDS

- GYPSUM BOARD OR CEMENT BOARD CEILING
- SUSPENDED ACT CEILING
- FLUORESCENT LIGHT FIXTURE
- EMERGENCY FLUORESCENT LIFE SAFETY LIGHT FIXTURE
- FLUOR. INCANDESCENT DOWN LIGHT FIXTURE
- EMERGENCY FLUOR. INCANDESCENT DOWN LIGHT FIXTURE
- EXIT LIGHT - PROVIDE ARROWS AS REQUIRED
- CEILING MOUNTED OCCUPANCY SENSOR
- WALL MOUNTED LIGHT FIXTURE
- RETURN OR EXHAUST REGISTER OR GRILLE
- SUPPLY DIFFUSER OR REGISTER

CEILING HEIGHT LEGEND

9' - 1" FINISH CEILING HEIGHTS NOTED IN EACH SPACE

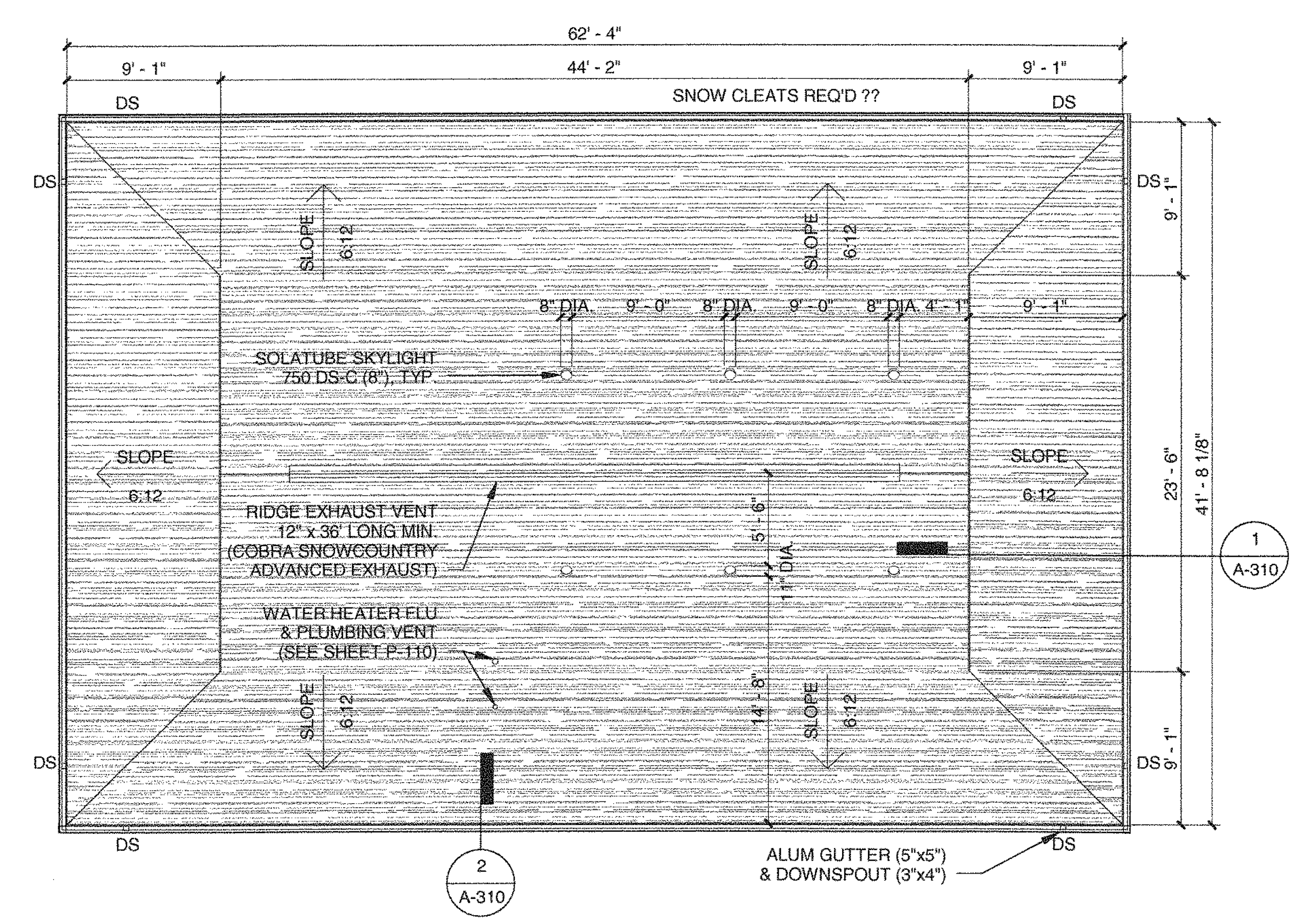

C ROOF PLAN

1/8" = 1'-0"

CHRISTIAN W. KUHN III, AIA
PROJECT PRINCIPAL

HASKELL ARCHITECTS and ENGINEERS, P.A.
NORTH CAROLINA - Architecture # 51202, Engineering # C-2136
HASKELL
The Haskell Company
111 Riverside Avenue
Jacksonville, Florida 32202
Phone # (904) 791-4500

MARINE CORPS AIR STATION CHERRY POINT
RECREATIONAL VEHICLE PARK
CHERRY POINT, NORTH CAROLINA

DATE	ISSUE/REVISION
6/11/12	FINAL CD
6/4/12	CI
4/9/12	OPT.2_95%
8/29/11	RPR
7/14/11	QDP
7/1/11	PR

THE FOLLOWING APPLIES TO EVERY LOCATION ON THIS SHEET:

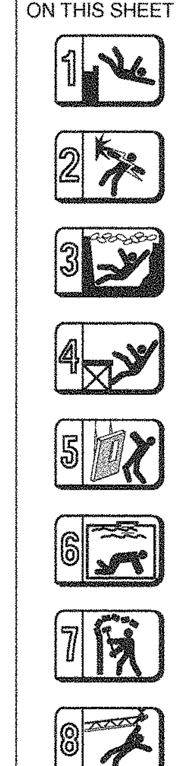

We hereby expressly reserve the property rights to this drawing and it is not to be reproduced or copied in any format or manner whatsoever without first obtaining our express written permission and consent.

DRAWN BY: MED
CHECKED BY: CWK
AE JOB NUMBER 6601490

BATH HOUSE & LAUNDRY PLANS

A-110
SHEET NUMBER

6/6/2012 9:00:19 AM
c:\Revit_Local\6601490AM(BATHHOUSE)-medahlbe.RVT

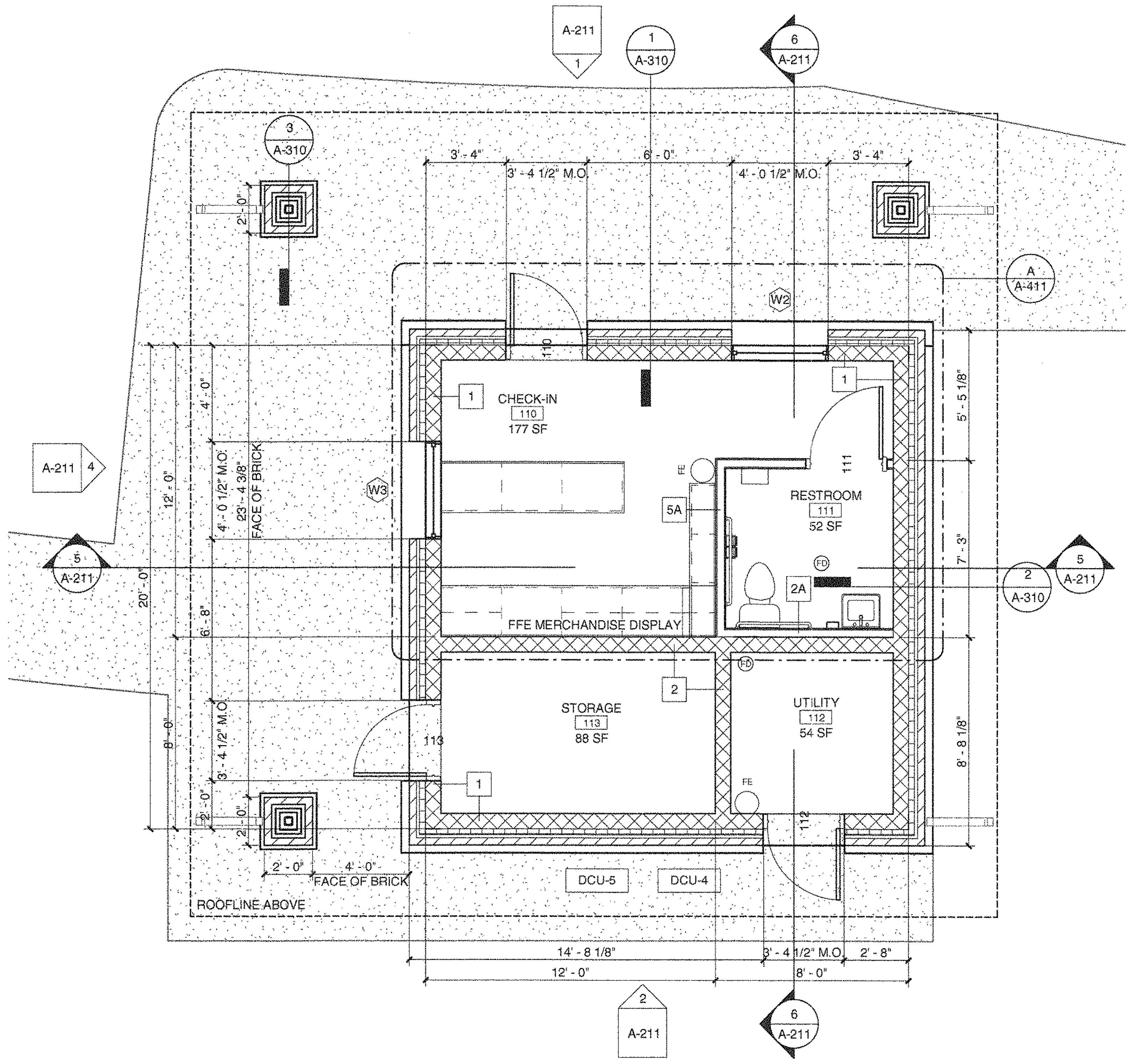

A FLOOR PLAN
1/4" = 1'-0"

TRUE NORTH PLAN NORTH

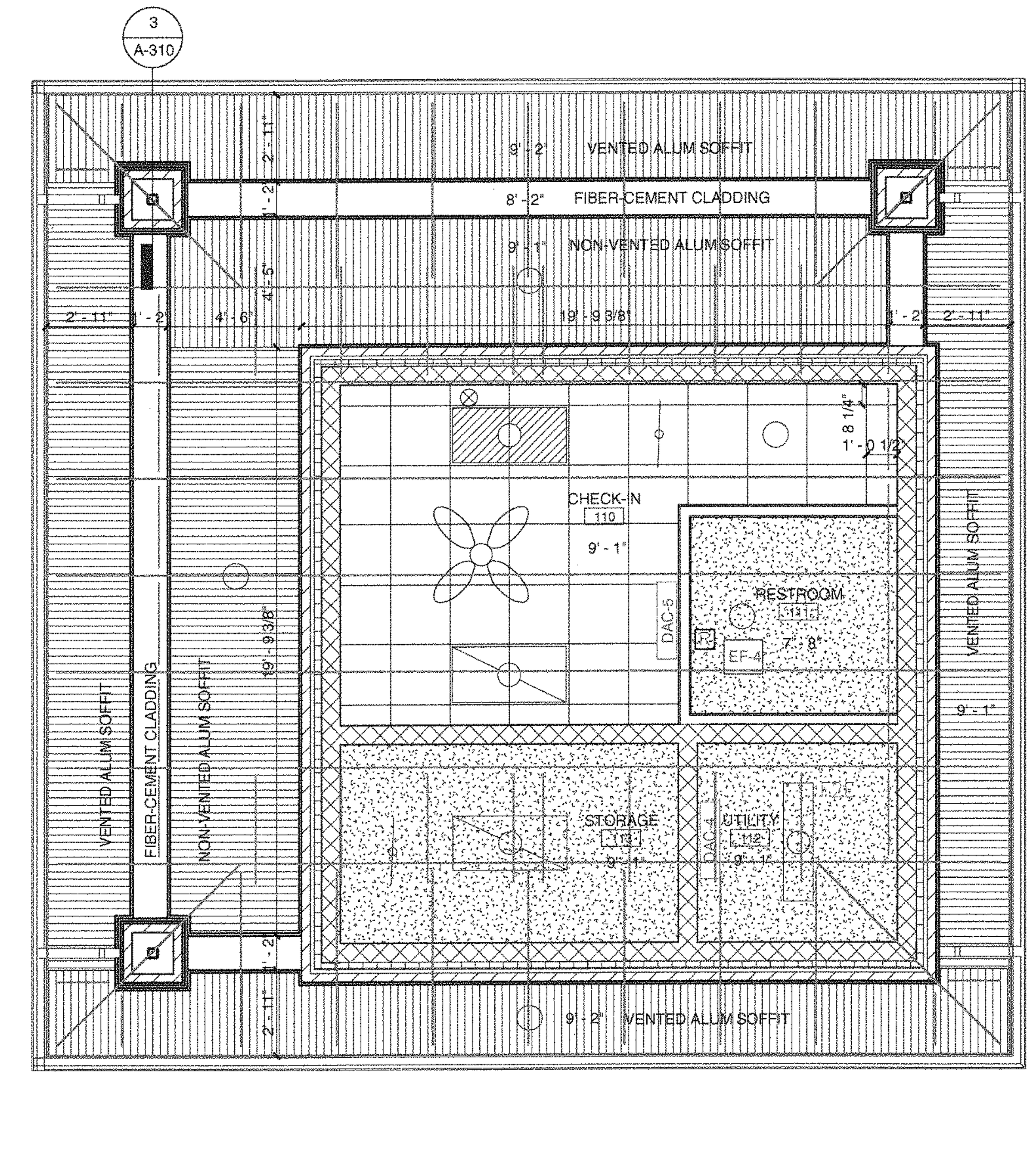

B REFLECTED CEILING PLAN
1/4" = 1'-0"

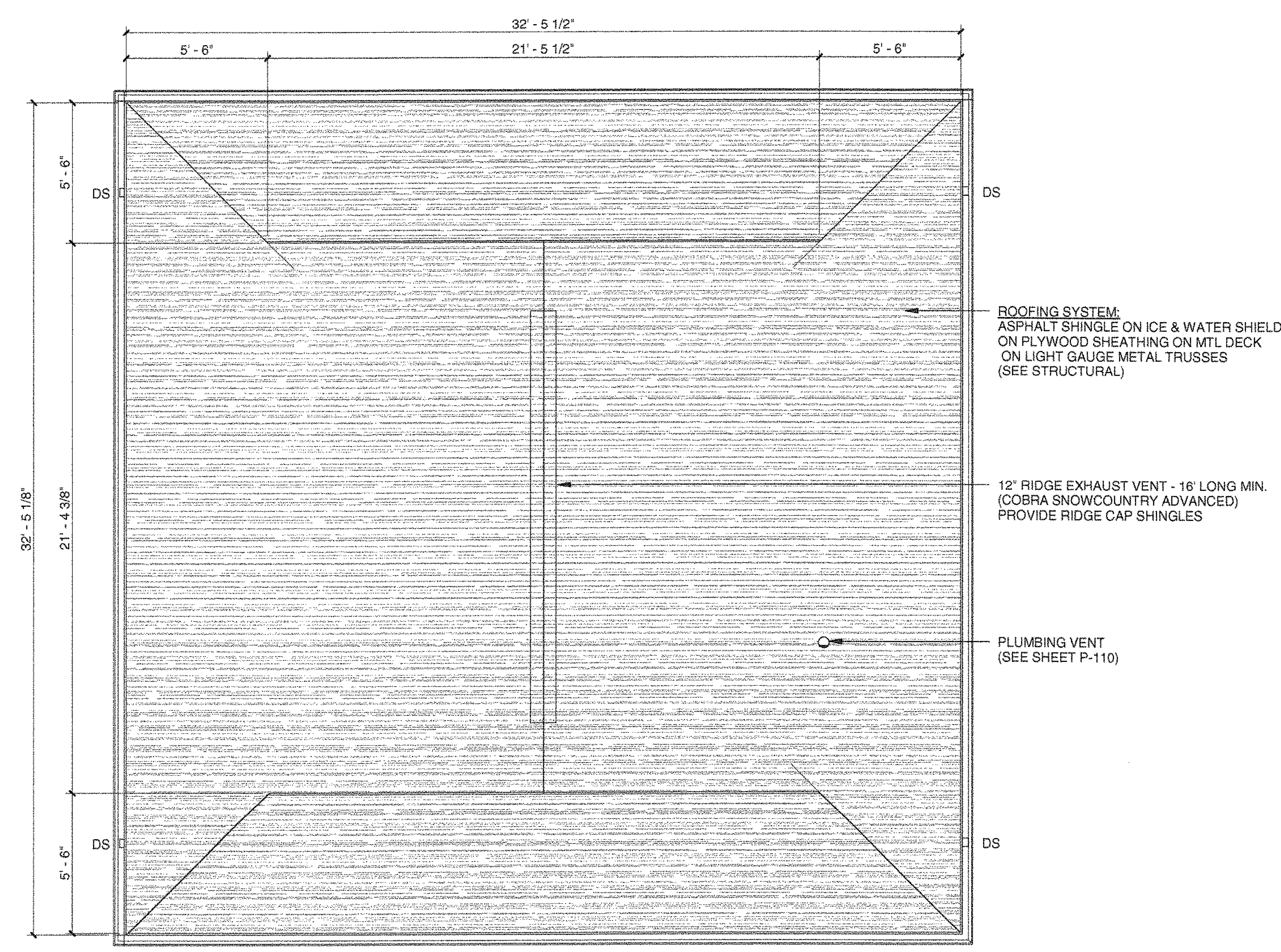

C ROOF PLAN
1/4" = 1'-0"

CHRISTIAN W. KUHN III, AIA
PROJECT PRINCIPAL

HASKELL ARCHITECTS and ENGINEERS, P.A.
NORTH CAROLINA - Architecture # 51202, Engineering # C-2136

The Haskell Company
111 Riverside Avenue
Jacksonville, Florida 32202
Phone # (904) 791-4500

HASKELL
America's Design-Build Leader®

MARINE CORPS AIR STATION CHERRY POINT

RECREATIONAL VEHICLE PARK

CHERRY POINT, NORTH CAROLINA

DATE	ISSUE/REVISION
6/11/12	FINAL CD
6/4/12	CI
8/29/11	RPR
7/14/11	QDP
7/1/11	PR

We hereby expressly reserve the property rights to this drawing and it is not to be reproduced or copied in any format or manner whatsoever without first obtaining our express written permission and consent.

DRAWN BY	CHECKED BY
MED	CWK

HE JOB NUMBER: 6601490

OFFICE CHECK-IN PLANS

SHEET NUMBER: **A-111**

6/6/2012 9:04:10 AM

c:\Revit_Local\6601490AM(OFFICE)-meda9be.RVT

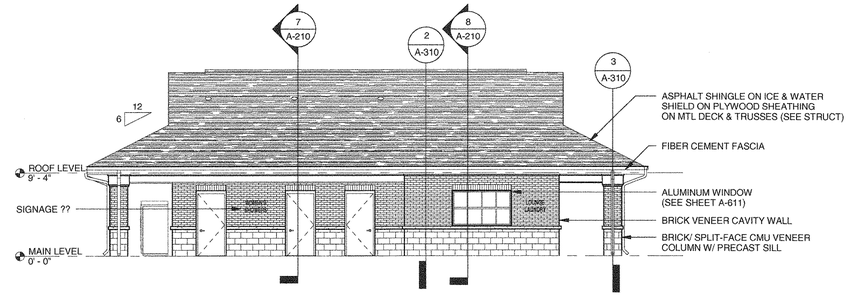

1 NORTH ELEVATION
1/8" = 1'-0"

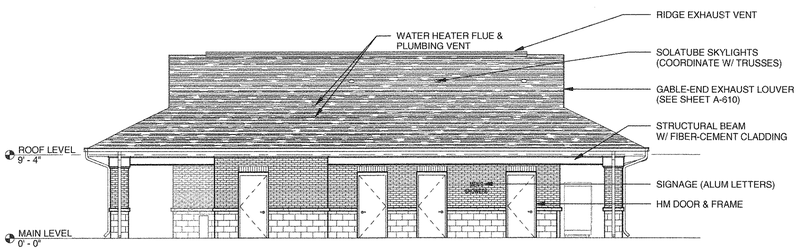

2 SOUTH ELEVATION
1/8" = 1'-0"

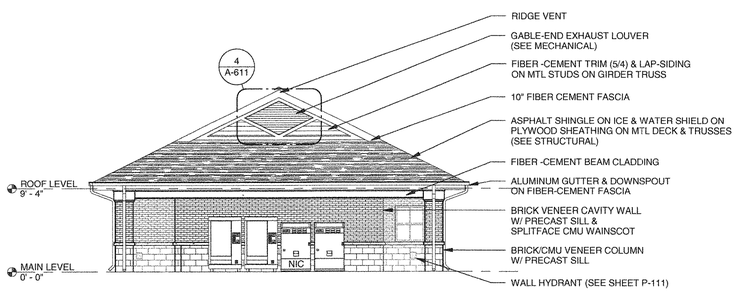

3 EAST ELEVATION
1/8" = 1'-0"

4 WEST ELEVATION
1/8" = 1'-0"

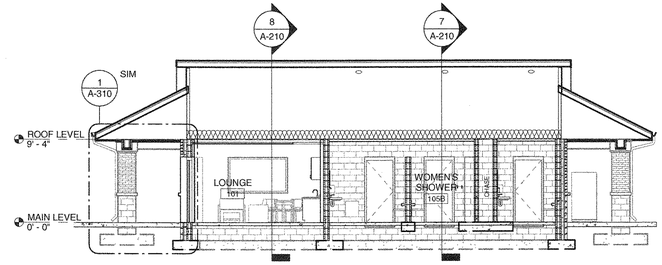

5 BUILDING SECTION 1
1/8" = 1'-0"

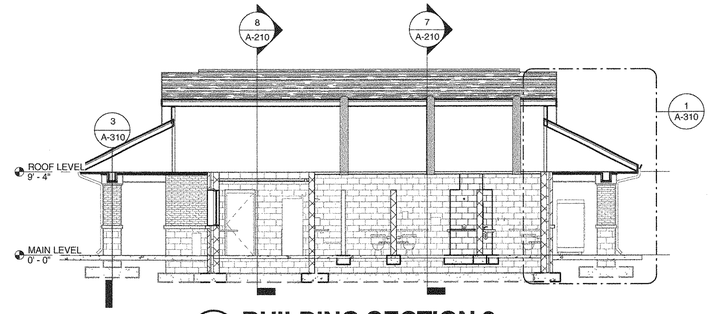

6 BUILDING SECTION 2
1/8" = 1'-0"

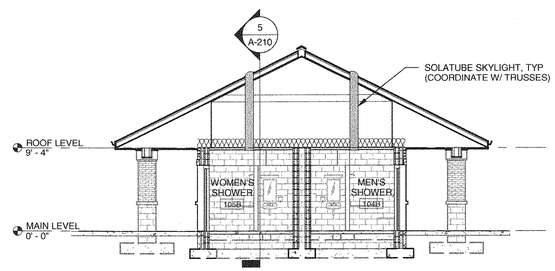

7 BUILDING SECTION 3
1/8" = 1'-0"

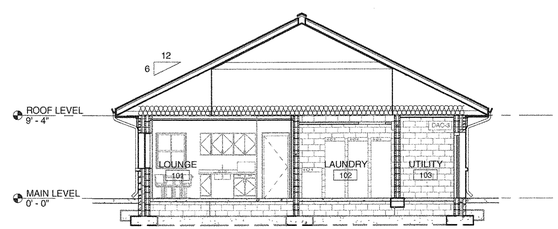

8 BUILDING SECTION 4
1/8" = 1'-0"

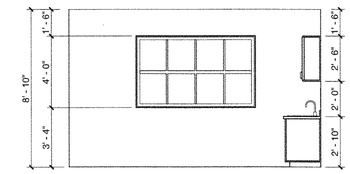

9 LOUNGE NORTH
1/4" = 1'-0"

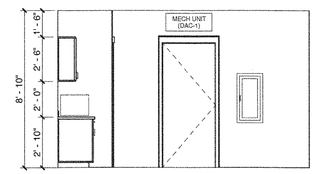

10 LOUNGE SOUTH
1/4" = 1'-0"

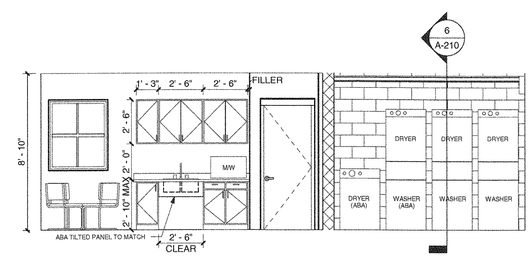

11 LOUNGE EAST
1/4" = 1'-0"

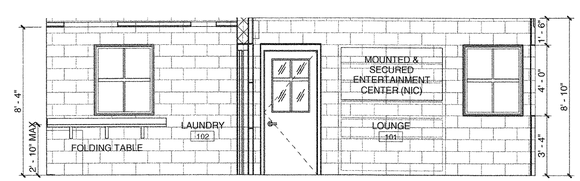

12 LOUNGE WEST
1/4" = 1'-0"

CHRISTIAN W. KUHN II, AIA
PROJECT PRINCIPAL
NO. 9885

HASKELL ARCHITECTS and ENGINEERS, P.A.
NORTH CAROLINA - Architecture # 51202, Engineering # C-2136
HASKELL
The Haskell Company
111 Riverside Avenue
Jacksonville, Florida 32202
Phone # (904) 791-4500

MARINE CORPS AIR STATION CHERRY POINT

RECREATIONAL VEHICLE PARK

CHERRY POINT, NORTH CAROLINA

DATE	ISSUE/REVISION
6/11/12	FINAL CD
6/4/12	CI
4/9/12	OPT.2_95%
8/29/11	RPR
7/14/11	QDP
7/1/11	PR

We hereby expressly reserve the property rights to this drawing and it is not to be reproduced or copied in any format or manner whatsoever without first obtaining our express written permission and consent.

DRAWN BY: MED
CHECKED BY: CWK

AE JOB NUMBER
6601490

BATH HOUSE ELEVATIONS & SECTIONS

A-210
SHEET NUMBER

6/6/2012 9:00:24 AM
c:\Revit_Local\6601490AM(BATHHOUSE)-mediaribe.RVT

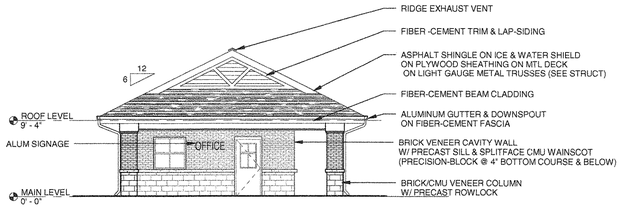

1 NORTH ELEVATION
1/8" = 1'-0"

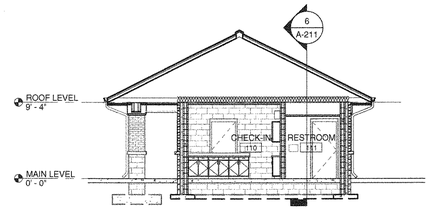

5 BUILDING SECTION 1
1/8" = 1'-0"

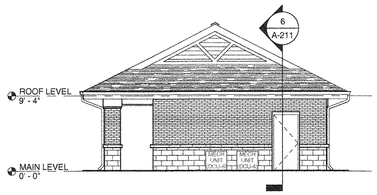

2 SOUTH ELEVATION
1/8" = 1'-0"

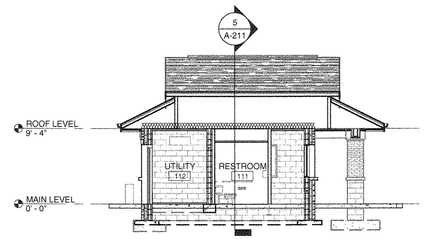

6 BUILDING SECTION 2
1/8" = 1'-0"

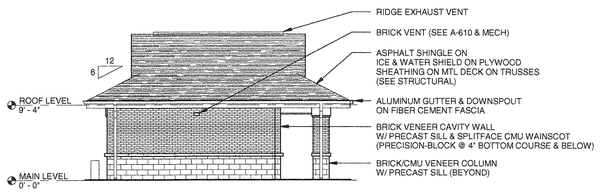

3 EAST ELEVATION
1/8" = 1'-0"

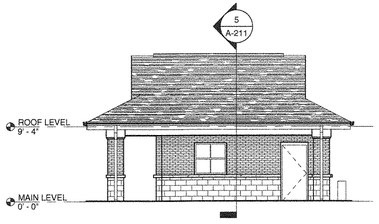

4 WEST ELEVATION
1/8" = 1'-0"

6/6/2012 9:04:12 AM

c:\Revit_Local\6601490AN(OFFICE)-mecaintbs.RVT

CHRISTIAN W. KUHN III, AIA
PROJECT PRINCIPAL
REG. NO. 9662

HASKELL ARCHITECTS and ENGINEERS, P.A.
NORTH CAROLINA - Architecture # 51202, Engineering # C-2136

HASKELL
Americas Design-Build Leader®

The Haskell Company
111 Riverside Avenue
Jacksonville, Florida 32202
Phone # (904) 791-4500

MARINE CORPS AIR STATION CHERRY POINT

RECREATIONAL VEHICLE PARK

CHERRY POINT, NORTH CAROLINA

DATE	ISSUE/REVISION
6/11/12	FINAL CD
6/4/12	CI
8/29/11	RPR
7/14/11	QDP
7/1/11	PR

We hereby expressly reserve the property rights to this drawing and it is not to be reproduced or copied in any format or manner whatsoever without first obtaining our express written permission and consent.

DRAWN BY: MED
CHECKED BY: CWK

AE JOB NUMBER
6601490

OFFICE CHECK-IN ELEVATIONS & SECTIONS

A-211
SHEET NUMBER

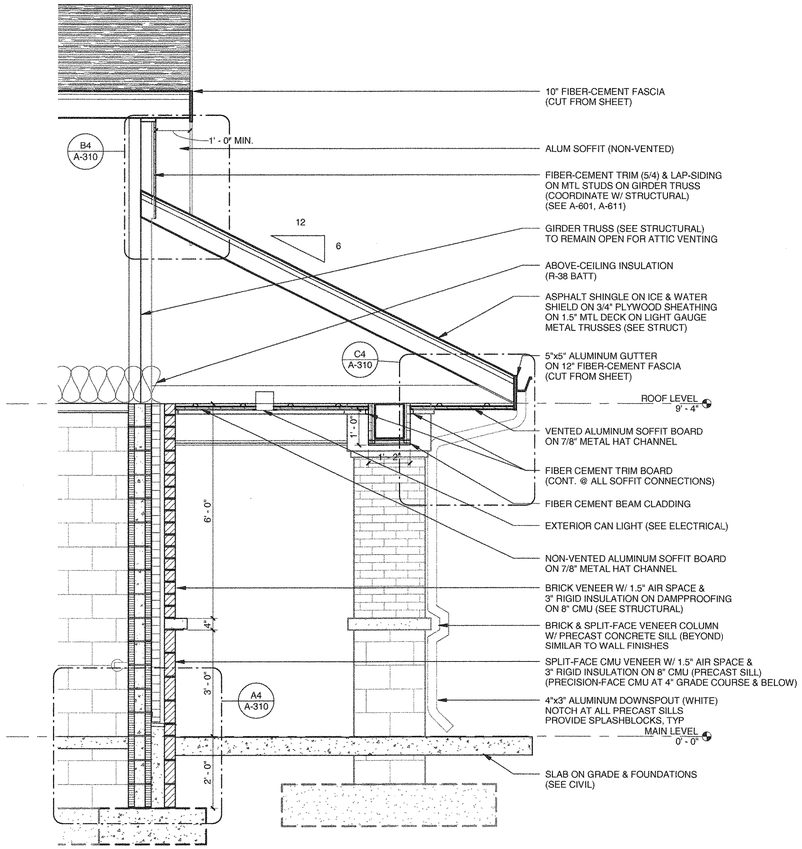

1 TYPICAL WALL SECTION @ OVERHANG
1/2" = 1'-0"

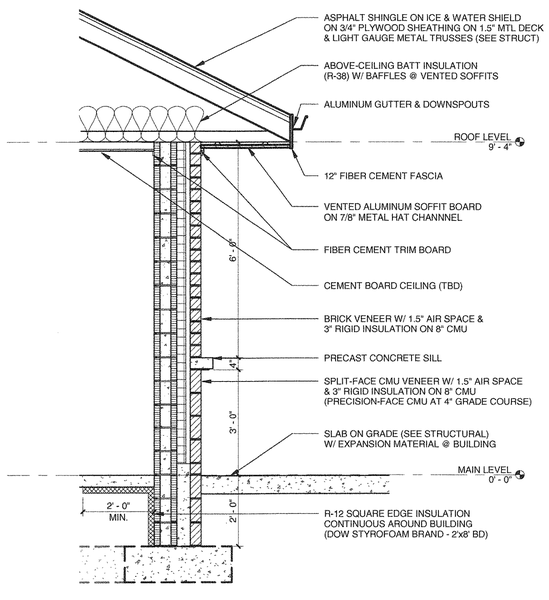

2 TYPICAL WALL SECTION
1/2" = 1'-0"

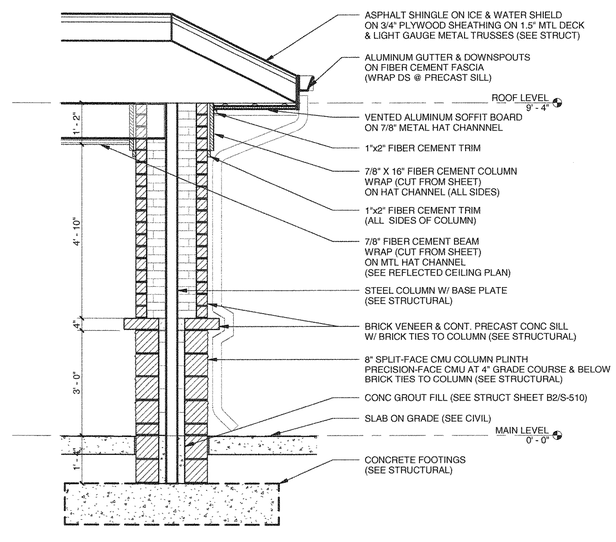

3 TYPICAL SECTION @ COLUMN
1/2" = 1'-0"

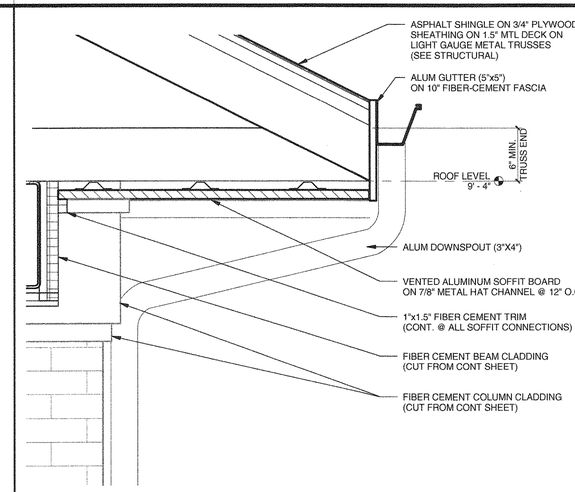

C4 ROOF EAVE DETAIL
Section 1 1/2" = 1'-0"

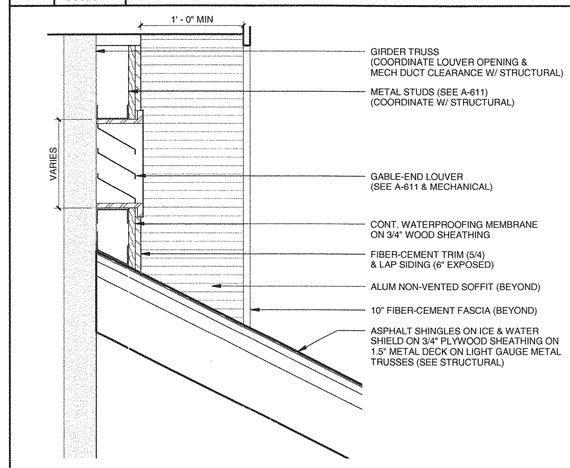

B4 ROOF GABLE DETAIL
Section 1 1/2" = 1'-0"

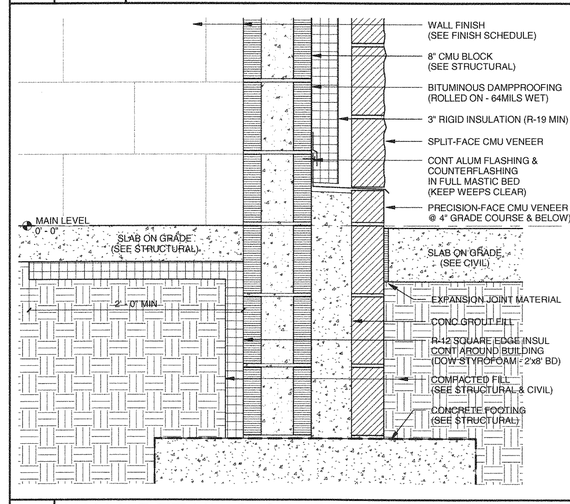

A4 WALL DETAIL @ GRADE
Section 1 1/2" = 1'-0"

CHRISTIAN W. KUHN III, AIA
PROJECT PRINCIPAL
REG. NO. 18907
6-11-12

HASKELL ARCHITECTS and ENGINEERS, P.A.
NORTH CAROLINA - Architecture # 51202, Engineering # C-2136
HASKELL®
The Haskell Company
111 Riverside Avenue
Jacksonville, Florida 32202
Phone # (904) 791-4500

MARINE CORPS AIR STATION CHERRY POINT

RECREATIONAL VEHICLE PARK

CHERRY POINT, NORTH CAROLINA

DATE	ISSUE/REVISION
6/11/12	FINAL CD
6/4/12	CI
4/9/12	OPT.2_95%
8/29/11	RPR
7/14/11	QDP
7/1/11	PR

We hereby expressly reserve the property rights to this drawing and it is not to be reproduced or copied in any format or manner whatsoever without first obtaining our express written permission and consent.

DRAWN BY: MED
CHECKED BY: CWK

AE JOB NUMBER
6601490

WALL SECTIONS & DETAILS

A-310
SHEET NUMBER

6/6/2012 9:00:25 AM
c:\Revit_Local\6601490AM(BATHHOUSE)-mediatitle.RVT

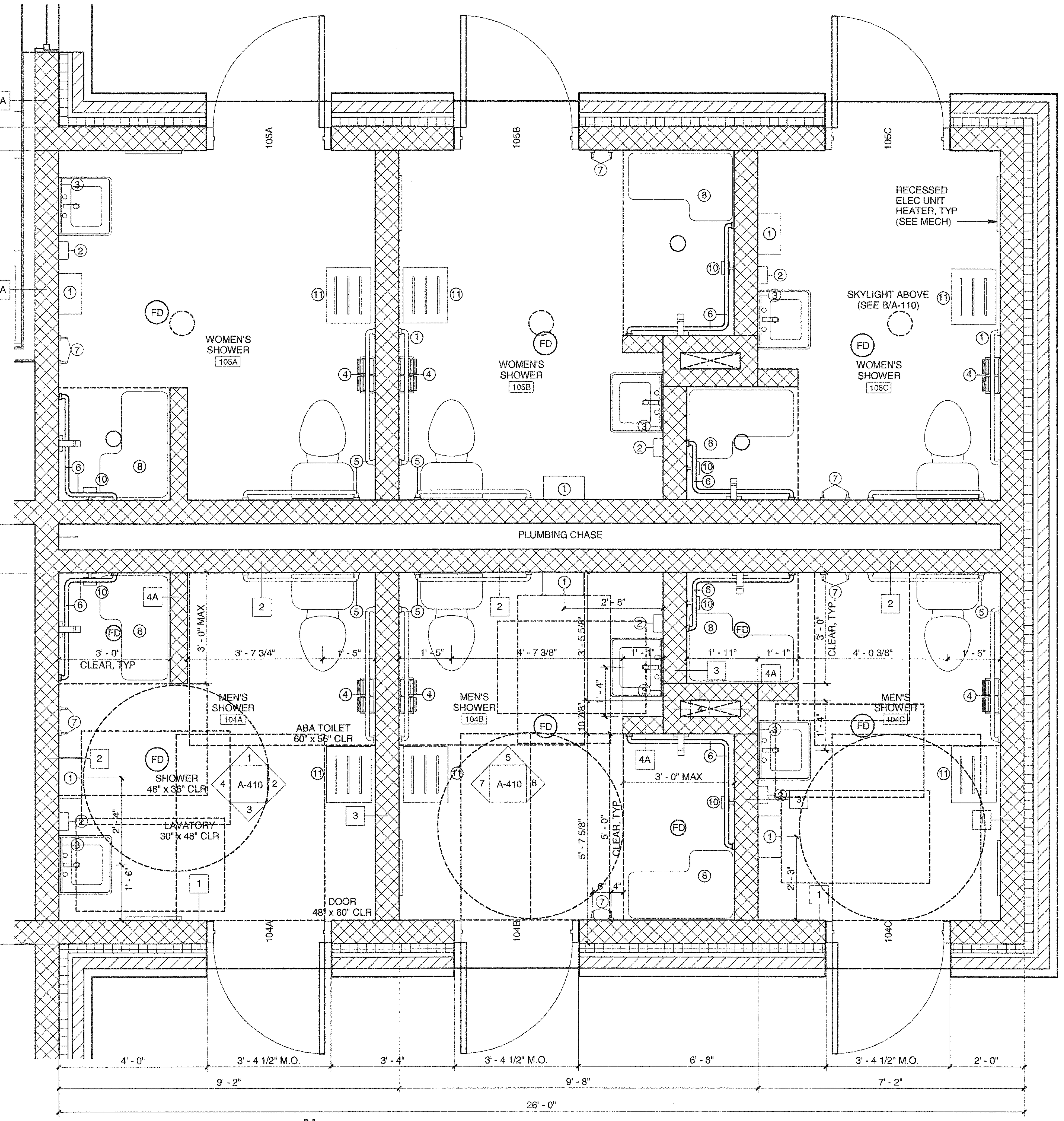

ACTUAL (18° E)

PLAN

A ENLARGED PLAN - SHOWERS

1/2" = 1'-0"

1	ELECTRIC HAND DRYER SURFACE MOUNTED BOBRICK MODEL B-708
2	SOAP DISPENSER SURFACE MOUNTED BOBRICK MODEL B-2112
3	FRAMED MIRROR W/ SHELF 18" x 36" BOBRICK MODEL B-166-1836 *(VERIFY FIXTURE CLEARANCE AT SHELF)*
4	TOILET PAPER HOLDER (DBL) SURFACE MOUNTED BOBRICK MODEL B-27460 *(OWNER PROVIDED)*
5	HANDICAPPED GRAB BARS TOILET BOBRICK MODEL B-6806x36 BOBRICK MODEL B-6806X42
6	HANDICAPPED GRAB BAR SHOWER BOBRICK MODEL B-68616 *(VERIFY SEAT FOLDING CLEARANCE AT GRAB BAR)*
7	ROBE HOOKS (2 PER STALL & TOILET RM) BOBRICK MODEL B-983
8	FOLDING SHOWER SEAT ABA COMPLIANT BOBRICK MODEL B-5181
9	SHOWER CURTAIN ROD EXTRA HEAVY DUTY 36" & 48" BOBRICK MODEL B-6047 CURTAIN B-2042 HOOKS B-2041
10	SOAP DISH (SURFACE MNTD) BOBRICK MODEL B-6807
11	FOLDING DRESSING SEAT ABA COMPLIANT BOBRICK MODEL B-5191

TOILET ACCESSORIES

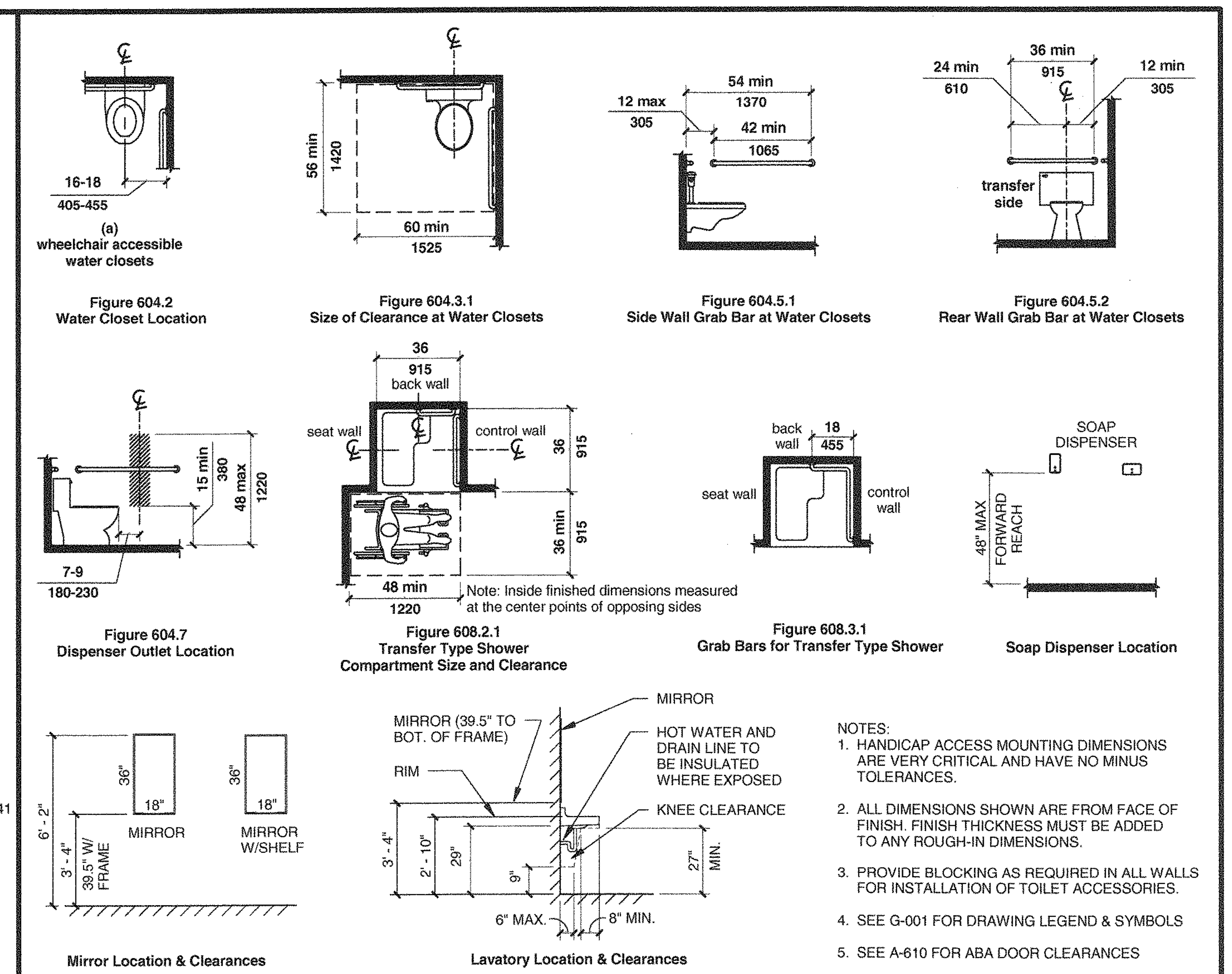

NOTES:

1. HANDICAP ACCESS MOUNTING DIMENSIONS ARE VERY CRITICAL AND HAVE NO MINUS TOLERANCES.
2. ALL DIMENSIONS SHOWN ARE FROM FACE OF FINISH. FINISH THICKNESS MUST BE ADDED TO ANY ROUGH-IN DIMENSIONS.
3. PROVIDE BLOCKING AS REQUIRED IN ALL WALLS FOR INSTALLATION OF TOILET ACCESSORIES.
4. SEE G-001 FOR DRAWING LEGEND & SYMBOLS
5. SEE A-610 FOR ABA DOOR CLEARANCES

ABA STANDARD DETAILS

TOILET ROOM ACCESSORY DETAILS ABOVE ARE TO BE USED FOR MINIMUM ABA CLEARANCES

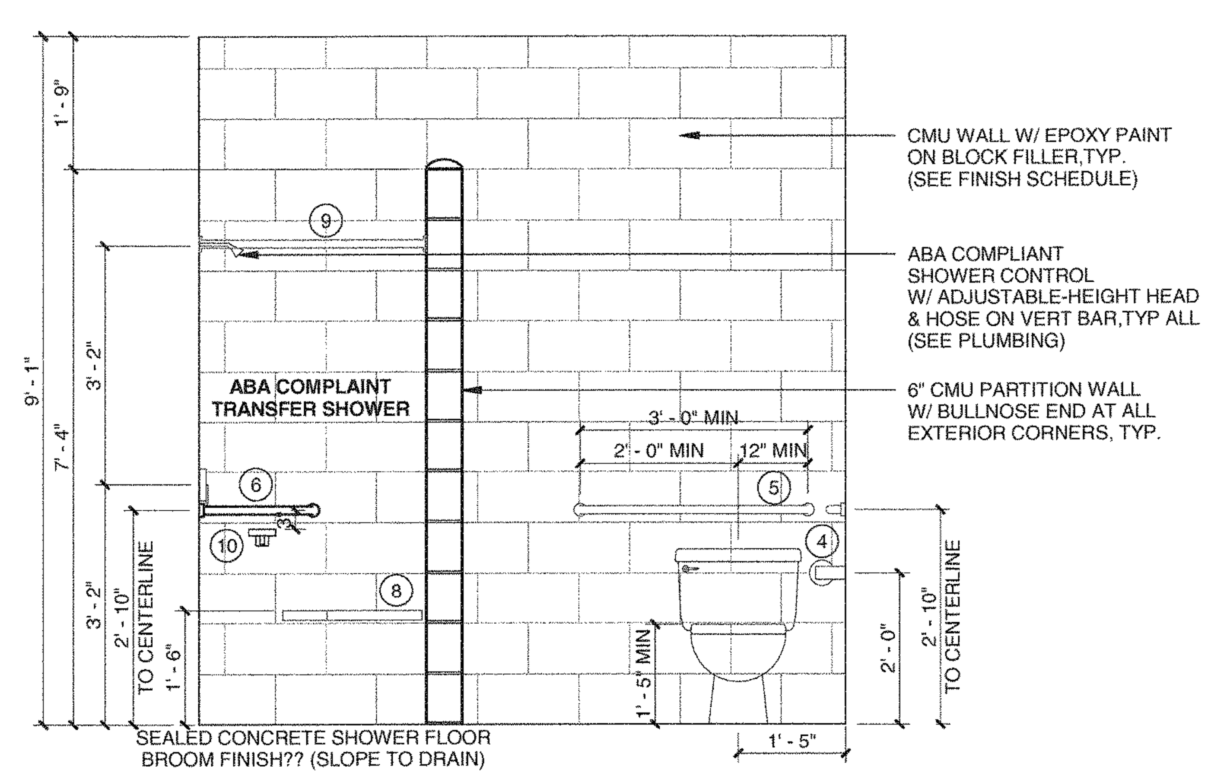

1 SHOWER A - NORTH

1/2" = 1'-0"

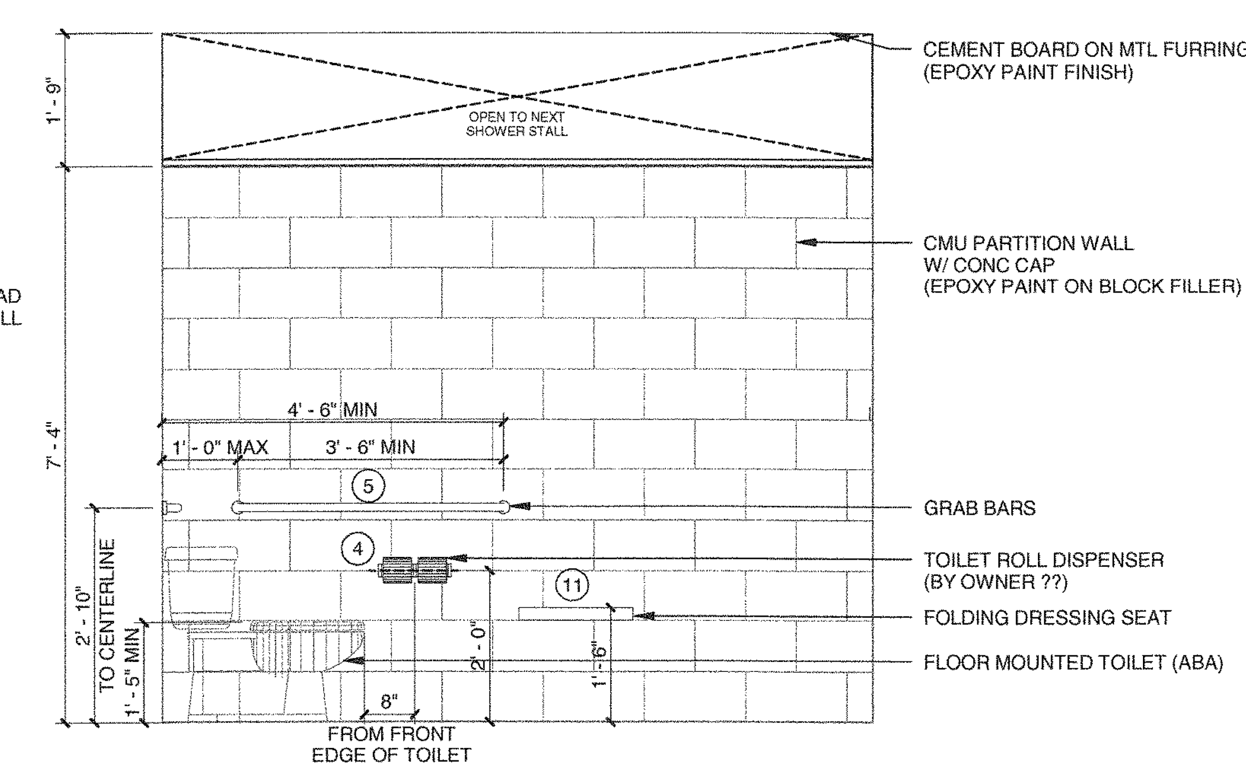

2 SHOWER A - EAST

1/2" = 1'-0"

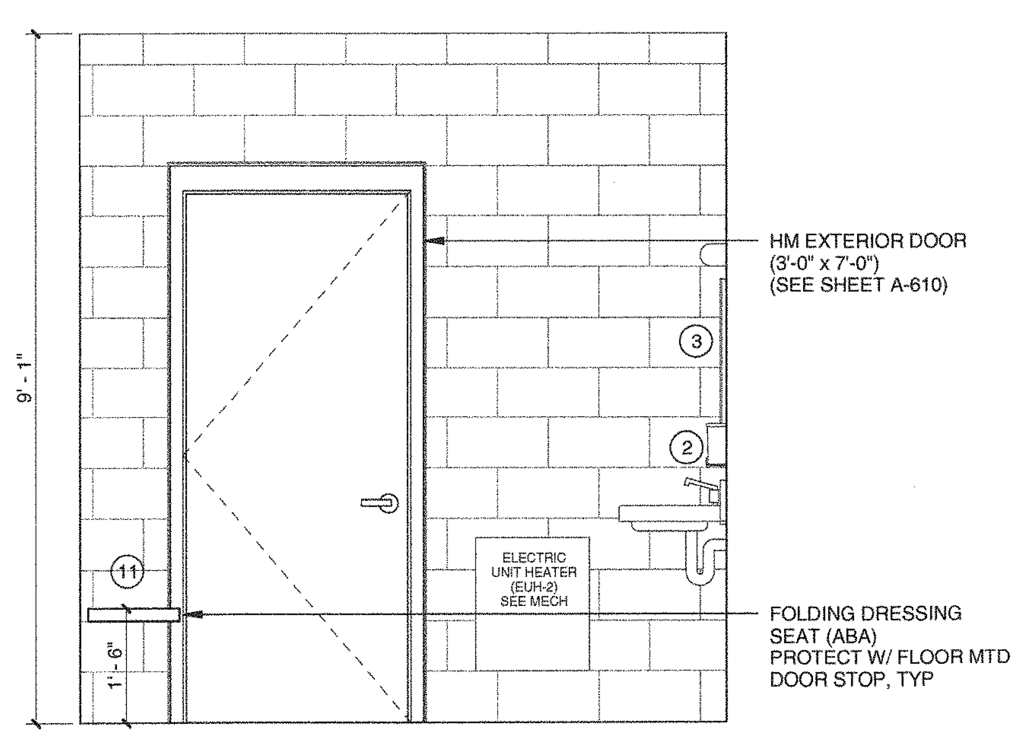

3 SHOWER A - SOUTH

1/2" = 1'-0"

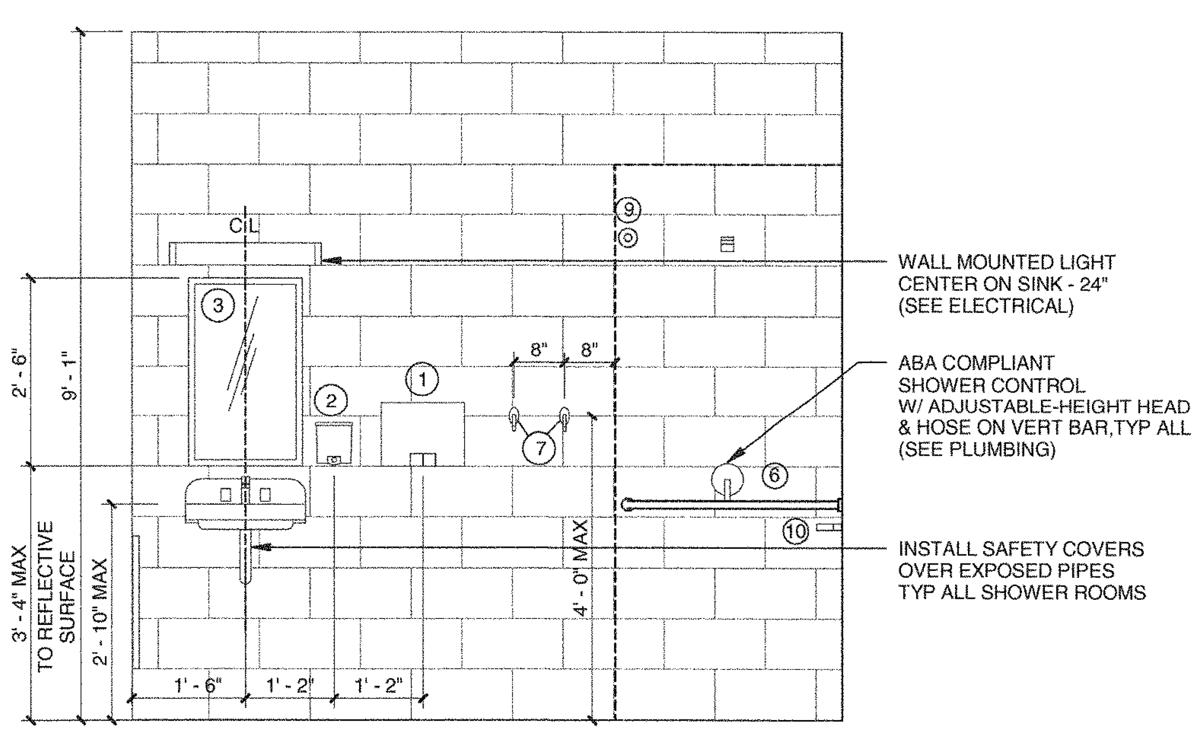

4 SHOWER A - WEST

1/2" = 1'-0"

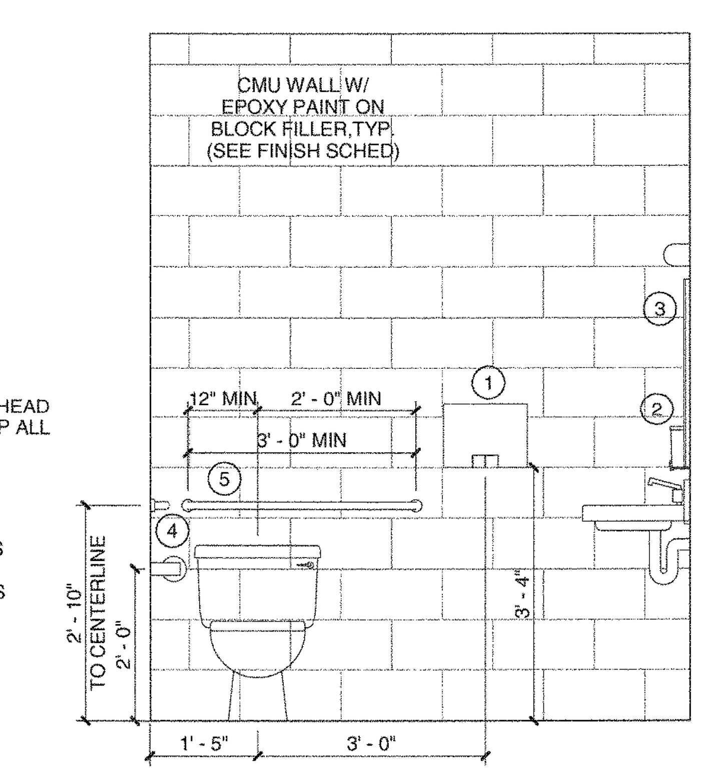

5 SHOWER B - NORTH

1/2" = 1'-0"

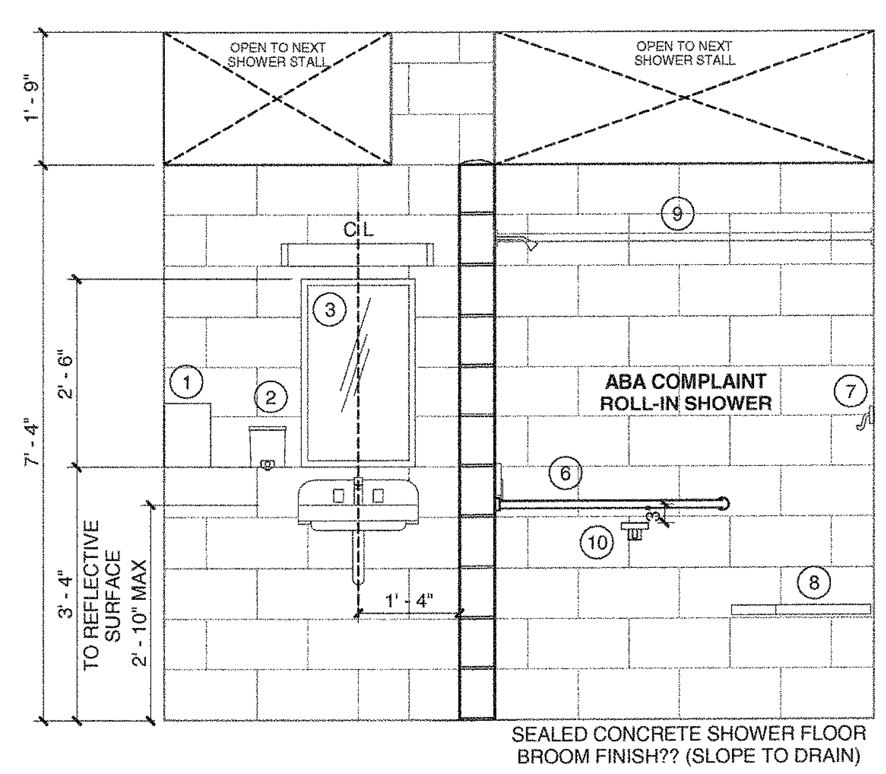

6 SHOWER B - EAST

1/2" = 1'-0"

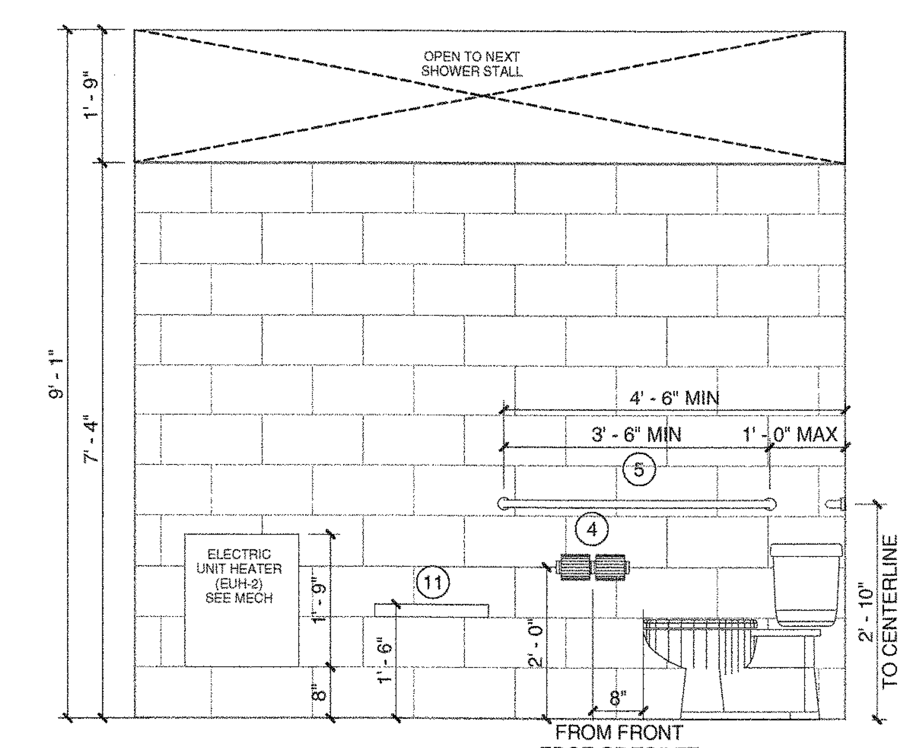

7 SHOWER B - WEST

1/2" = 1'-0"

CHRISTIAN W. KUHN III, AIA
PROJECT PRINCIPAL

HASKELL ARCHITECTS and ENGINEERS, P.A.
NORTH CAROLINA - Architecture # 51202, Engineering # C-2136

HASKELL®
The Haskell Company
111 Riverside Avenue
Jacksonville, Florida 32202
Phone # (904) 791-4500

MARINE CORPS AIR STATION CHERRY POINT

RECREATIONAL VEHICLE PARK

CHERRY POINT, NORTH CAROLINA

DATE	ISSUE/REVISION
6/11/12	FINAL CD
6/4/12	CI
4/9/12	OPT.2_95%

We hereby expressly reserve the property rights to this drawing and it is not to be reproduced or copied in any format or manner whatsoever without first obtaining our express written permission and consent.

DRAWN BY: MED
CHECKED BY: CWK

AE JOB NUMBER: 6601490

BATH HOUSE - ENLARGED PLANS & INTERIOR ELEVATIONS

A-410

SHEET NUMBER

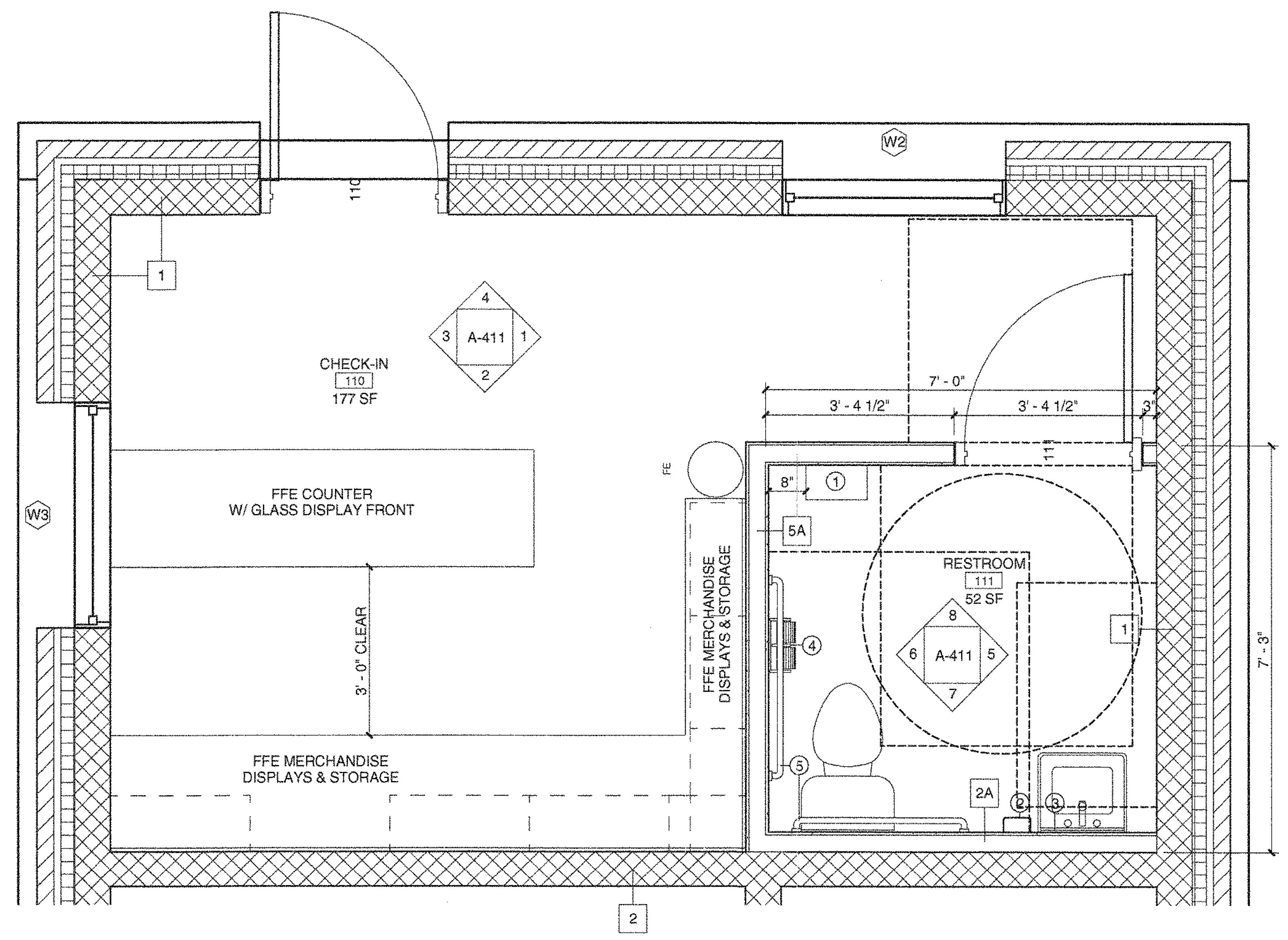

A ENLARGED FLOOR PLAN
1/2" = 1'-0"

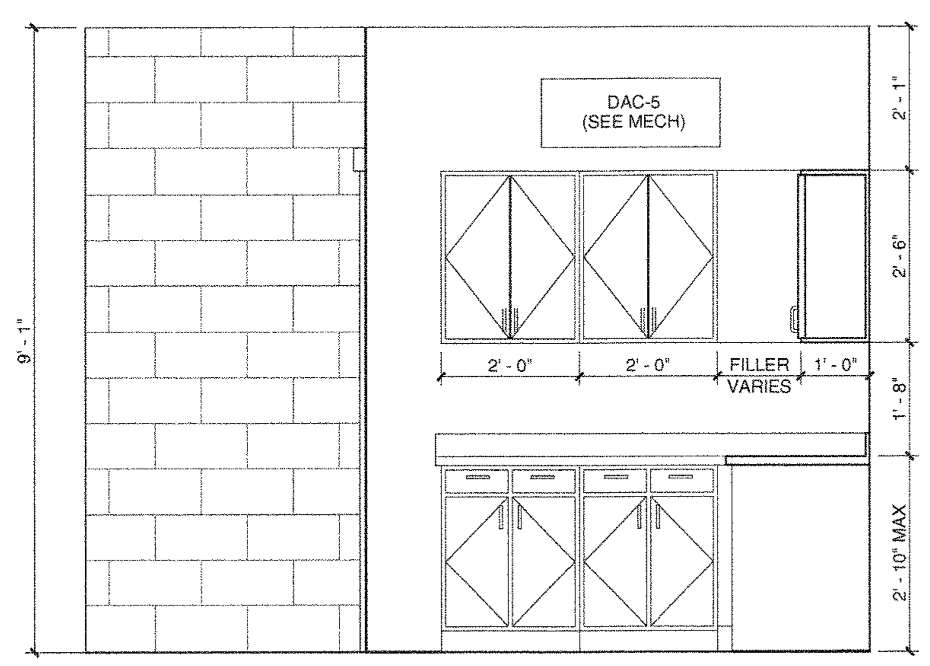

1 OFFICE - NORTH
1/2" = 1'-0"

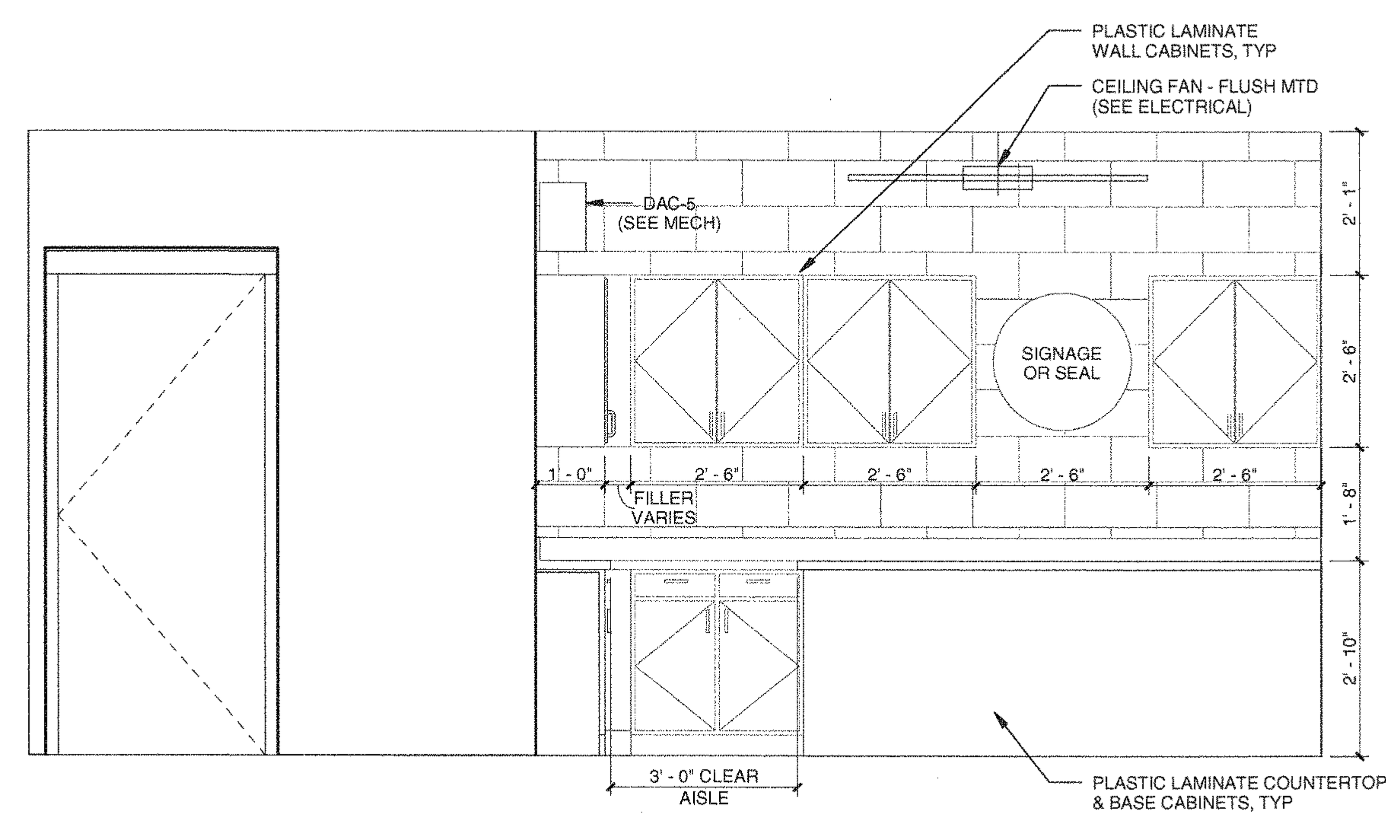

2 OFFICE - EAST
1/2" = 1'-0"

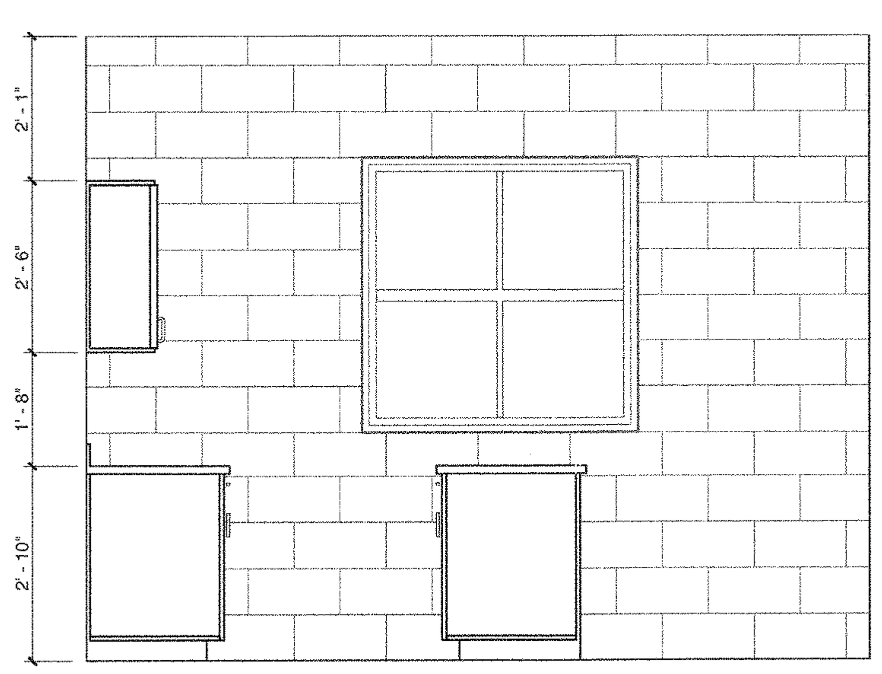

3 OFFICE - SOUTH
1/2" = 1'-0"

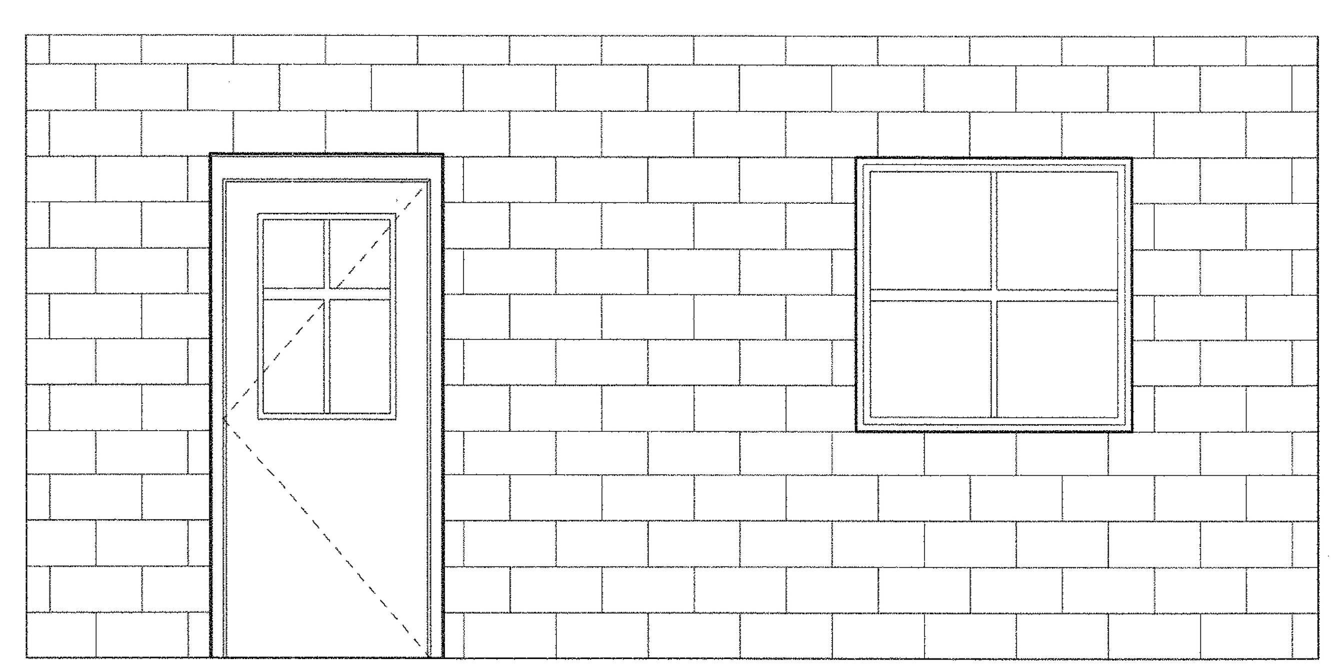

4 OFFICE - WEST
1/2" = 1'-0"

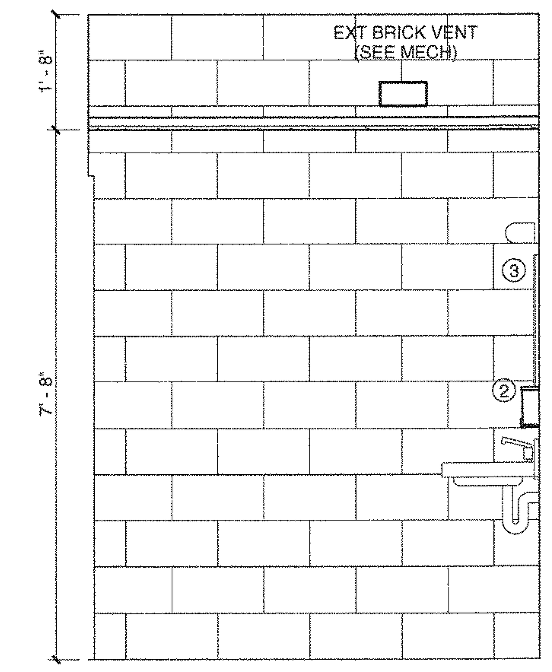

5 RESTROOM - NORTH
1/2" = 1'-0"

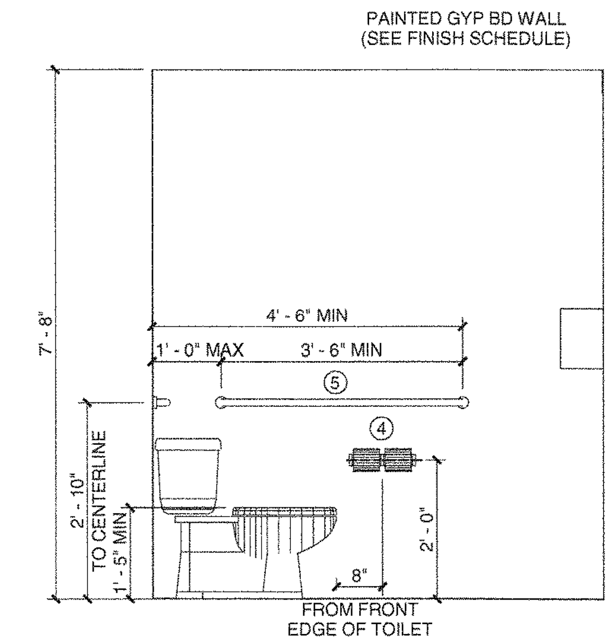

6 RESTROOM - SOUTH
1/2" = 1'-0"

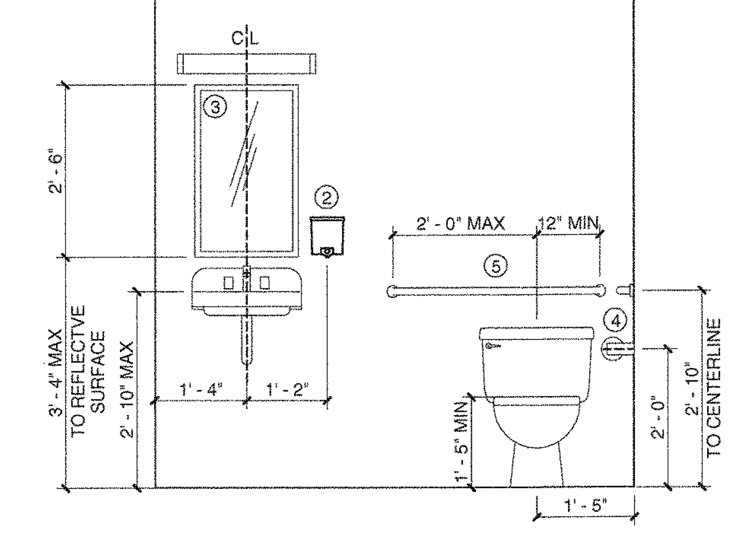

7 RESTROOM - EAST
1/2" = 1'-0"

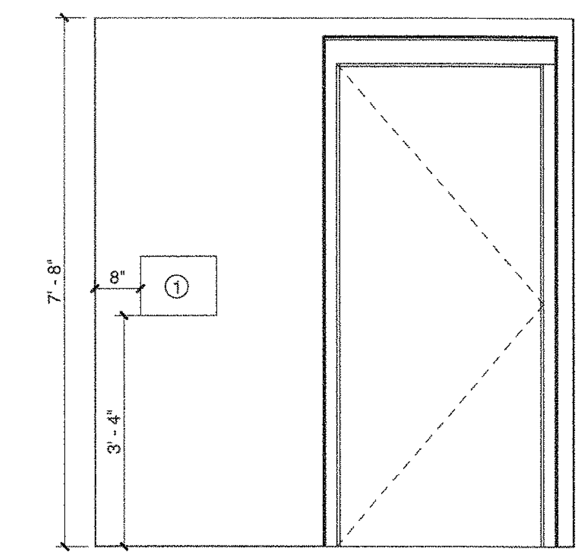

8 RESTROOM - WEST
1/2" = 1'-0"

NOTE:
SEE SHEET A-410 FOR TOILET ACCESSORIES & ABA CLEARANCES

CHRISTIAN W. KUHN III, AIA
PROJECT PRINCIPAL

HASKELL ARCHITECTS and ENGINEERS, P.A.
NORTH CAROLINA - Architecture # 51202, Engineering # C-2136

The Haskell Company
111 Riverside Avenue
Jacksonville, Florida 32202
Phone # (904) 791-4500

HASKELL
America's Design-Build Leader®

MARINE CORPS AIR STATION CHERRY POINT

RECREATIONAL VEHICLE PARK

CHERRY POINT, NORTH CAROLINA

DATE	ISSUE/REVISION
6/11/12	FINAL CD
6/4/12	CI

We hereby expressly reserve the property rights to this drawing and it is not to be reproduced or copied in any format or manner whatsoever without first obtaining our express written permission and consent.

DRAWN BY:	CHECKED BY:
MED	CWK

AE JOB NUMBER
6601490

OFFICE CHECK-IN ENLARGED PLANS, INTERIOR ELEVATIONS

A-411
SHEET NUMBER

6/6/2012 9:04:14 AM
c:\Revit_Local\6601490AM(OFFICE)-medahlbe.RVT

INTERIOR PARTITION & WALL TYPES

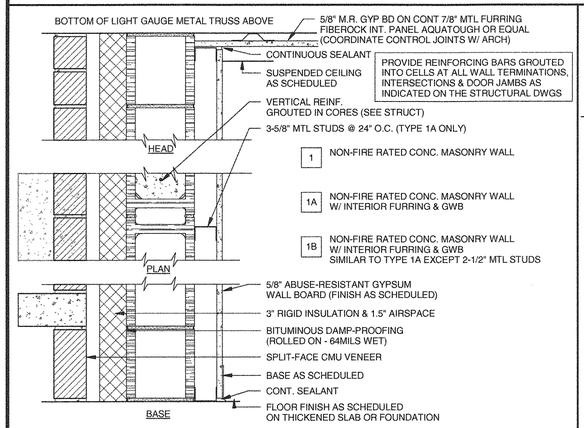

NON-RATED CMU BEARING WALL

WALL TYPE	FIRE RATING	TEST REF. NO.	STC	TEST REF. NO.	PARTITION THICKNESS	ALLOW. HGT. 20 X THK.	SUB-DETAILS
1	0HR.	---	-	---	15-3/4"	-	---
1A	0HR.	---	-	---	18-7/8"	-	---

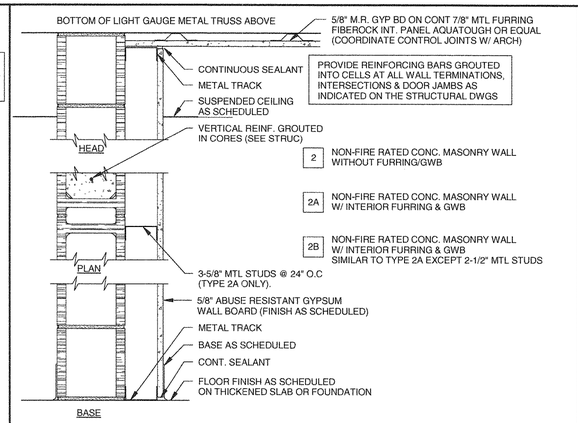

NON-RATED CMU BEARING WALL

WALL TYPE	FIRE RATING	TEST REF. NO.	STC	TEST REF. NO.	PARTITION THICKNESS	ALLOW. HGT. 20 X THK.	SUB-DETAILS
2	0HR.	---	-	---	7-5/8"	-	---
2A	0HR.	---	-	---	11-7/8"	-	---
2B	0HR.	---	-	---	10-3/4"	-	---

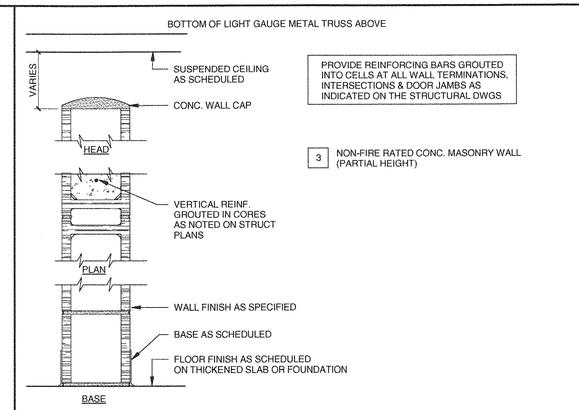

NON-RATED CMU NON-BEARING WALL

WALL TYPE	FIRE RATING	TEST REF. NO.	STC	TEST REF. NO.	PARTITION THICKNESS	ALLOW. HGT. 20 X THK.	SUB-DETAILS
3	0HR.	---	-	---	7-5/8"	-	

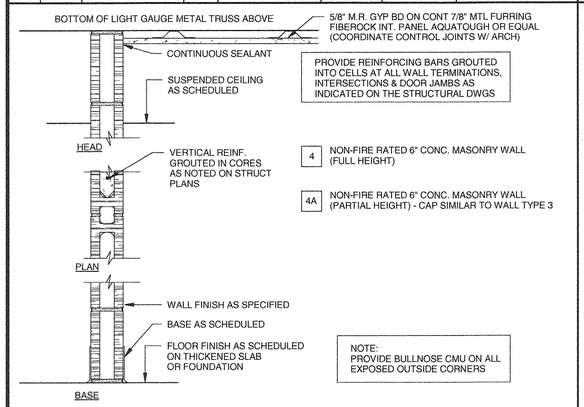

NON-RATED NON-BEARING CMU PLUMBING CHASE

WALL TYPE	FIRE RATING	TEST REF. NO.	STC	TEST REF. NO.	PARTITION THICKNESS	ALLOW. HGT. 20 X THK.	SUB-DETAILS
4	0HR.	---	-	---	5-5/8"	-	
4A	0HR.	---	-	---	5-5/8"	-	

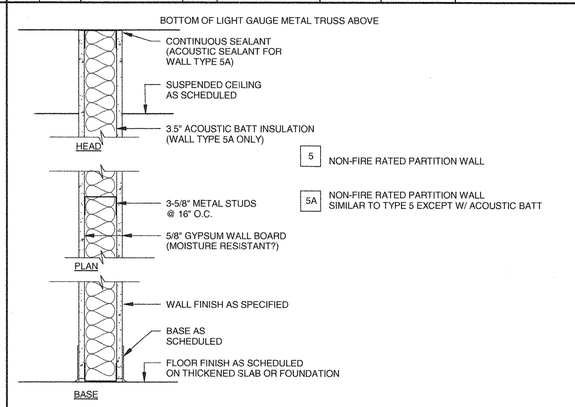

NON-RATED NON -BEARING PARTITION WALL

WALL TYPE	FIRE RATING	TEST REF. NO.	STC	TEST REF. NO.	PARTITION THICKNESS	ALLOW. HGT. 20 X THK.	SUB-DETAILS
5	0HR.	---	-	---	4-7/8"	-	
5A	0HR.	---	-	---	4-7/8"	-	

GENERAL WALL TYPE NOTES

1. FOR EXTERIOR WALLS SEE BUILDING AND WALL SECTIONS FOR CONSTRUCTION REQUIREMENTS.
2. SEE STENCILING DETAIL ON THIS SHEET FOR WALL LABELING REQUIREMENTS.
3. PROVIDE PAPERLESS MOISTURE RESISTANT GYPSUM BOARD ON WALLS & CEILINGS AT ALL LOCATIONS SUBJECT TO MOISTURE SUCH AS TOILETS, LOCKER ROOMS, SHOWER AREAS
4. PROVIDE MIN. TWO STUDS AT ALL DOOR AND WINDOW JAMBS FULL HEIGHT OF WALL, FOR INTERIOR PARTITIONS.
5. SEAL AROUND PERIMETER OF ALL SOUND RATED WALLS AND PARTITIONS IN ACCORDANCE WITH ALL FIRE AND STC RATINGS AND AS REQUIRED BY ALL APPLICABLE BUILDING CODES.
6. PROVIDE WALL BACKING, OF METAL OR F.R. WOOD, WHERE REQUIRED FOR WALL HUNG CASEWORK, OR EQUIPMENT.
7. PROVIDE BACKING IN WALL, OF METAL OR F.R. WOOD, FOR ALL ACCESSORIES INCLUDING, BUT NOT LIMITED TO SUCH ITEMS AS TOILET PARTITIONS, GRAB BARS, DOOR STOPS, DOOR BUMPERS, HANDRAILS, TV BRACKETS, ETC.
8. WALL TYPE NUMBERING MAY NOT BE IN SEQUENTIAL NUMERICAL ORDER, i.e. THE PROJECT MAY HAVE A WALL TYPE 1 AND 3 BUT MIGHT NOT HAVE A WALL TYPE 2.
9. CONTROL JOINTS SHALL BE PROVIDED IN ALL GWB PARTITIONS AND SHALL NOT EXCEED 30' O.C. CEILING JOINTS SHALL ALSO NOT EXCEED 30' O.C. AND NO MORE THAN 900 SQ. FT IN AREA.
10. PARTITIONS THAT ARE REQUIRED TO EXTEND TO STRUCTURE SHALL HAVE THE GYPSUM BOARD CUT TO FIT WITHIN A 1/4" MAX TOLERANCE TO THE SHAPE OF THE STRUCTURE AND SHALL BE SEALED WITH AN APPROVED TOP OF WALL SYSTEM. THE GYPSUM BOARD SHALL ALSO BE CUT TO FIT WITHIN A 1/4" MAX TOLERANCE AROUND ALL PENETRATIONS (DUCT, PIPING, CONDUIT, ELECTRICAL BOX,ETC.) THE BOTTOM OF THE GYPSUM BOARD SHALL BE WITHIN 1/4" OF STRUCTURE AND SHALL BE SEALED WITH ACOUSTICAL SEALANT.

CHRISTIAN W. KUHN III, AIA
PROJECT PRINCIPAL
6-11-12
REG. NO. 11811

HASKELL ARCHITECTS and ENGINEERS, P.A.
NORTH CAROLINA - Architecture # 51202, Engineering # C-2136
HASKELL®
The Haskell Company
111 Riverside Avenue
Jacksonville, Florida 32202
Phone # (904) 791-4500

MARINE CORPS AIR STATION CHERRY POINT

RECREATIONAL VEHICLE PARK

CHERRY POINT, NORTH CAROLINA

DATE	ISSUE/REVISION
6/4/12	CI
4/9/12	OPT.2_95%

We hereby expressly reserve the property rights to this drawing and it is not to be reproduced or copied in any format or manner whatsoever without first obtaining our express written permission and consent.

DRAWN BY: MED
CHECKED BY: CWK

AE JOB NUMBER
6601490

WALL TYPES & DETAILS

A-601
SHEET NUMBER

6/6/2012 9:00:30 AM
c:\Revit_Local\6601490AM(BATHHOUSE)-mediahbe.RVT

DOOR SCHEDULE

DOOR NUMBER	BUILDING	LOCATION	DOOR TYPE	WIDTH	HEIGHT	THICKNESS	DOOR MATERIAL	FRAME MATERIAL	FINISH COLOR	CORE PROPERTIES	HARDWARE SET	FIRE RATING	RAMARKS
101	BATHHOUSE	LOUNGE	A	3' - 0"	7' - 0"	1 3/4"	HM	HM	HUNTER GREEN ?	INSULATED		0 HR.	CYPHER LOCK (ABA-COMPLIANT)
101A	BATHHOUSE	STORAGE	D	2' - 8"	7' - 0"	1 3/4"	HM	HM	HUNTER GREEN ?	NON-INSULATED		0 HR.	MAINTENANCE LOCK
102	BATHHOUSE	LAUNDRY	E	3' - 0"	7' - 0"	1 3/4"	HM	HM	HUNTER GREEN ?	INSULATED		0 HR.	
103	BATHHOUSE	UTILITY	C	3' - 0"	7' - 0"	1 3/4"	HM	HM	HUNTER GREEN ?	INSULATED		0 HR.	MAINTENANCE LOCK (LOUVER??)
104A	BATHHOUSE	MEN'S SHOWER	B	3' - 0"	7' - 0"	1 3/4"	HM	HM	HUNTER GREEN ?	INSULATED		0 HR.	CYPHER LOCK W/ INTERIOR LOCK (ABA-COMPLIANT)
104B	BATHHOUSE	MEN'S SHOWER	B	3' - 0"	7' - 0"	1 3/4"	HM	HM	HUNTER GREEN ?	INSULATED		0 HR.	CYPHER LOCK W/ INTERIOR LOCK (ABA-COMPLIANT)
104C	BATHHOUSE	MEN'S SHOWER	B	3' - 0"	7' - 0"	1 3/4"	HM	HM	HUNTER GREEN ?	INSULATED		0 HR.	CYPHER LOCK W/ INTERIOR LOCK (ABA-COMPLIANT)
105A	BATHHOUSE	WOMEN'S SHOWER	B	3' - 0"	7' - 0"	1 3/4"	HM	HM	HUNTER GREEN ?	INSULATED		0 HR.	CYPHER LOCK W/ INTERIOR LOCK (ABA-COMPLIANT)
105B	BATHHOUSE	WOMEN'S SHOWER	B	3' - 0"	7' - 0"	1 3/4"	HM	HM	HUNTER GREEN ?	INSULATED		0 HR.	CYPHER LOCK W/ INTERIOR LOCK (ABA-COMPLIANT)
105C	BATHHOUSE	WOMEN'S SHOWER	B	3' - 0"	7' - 0"	1 3/4"	HM	HM	HUNTER GREEN ?	INSULATED		0 HR.	CYPHER LOCK W/ INTERIOR LOCK (ABA-COMPLIANT)
110	OFFICE	OFFICE	A	3' - 0"	7' - 0"	1 3/4"	HM	HM	HUNTER GREEN ?	INSULATED		0 HR.	CYPHER LOCK (ABA-COMPLIANT)
111	OFFICE	RESTROOM	F	3' - 0"	7' - 0"	1 3/4"	HM	HM	HUNTER GREEN ?	NON-INSULATED		0 HR.	INTERIOR LOCK
112	OFFICE	STORAGE	B	3' - 0"	7' - 0"	1 3/4"	HM	HM	HUNTER GREEN ?	INSULATED		0 HR.	MAINTENANCE LOCK
113	OFFICE	UTILITY	C	3' - 0"	7' - 0"	1 3/4"	HM	HM	HUNTER GREEN ?	INSULATED		0 HR.	MAINTENANCE LOCK (LOUVER??)

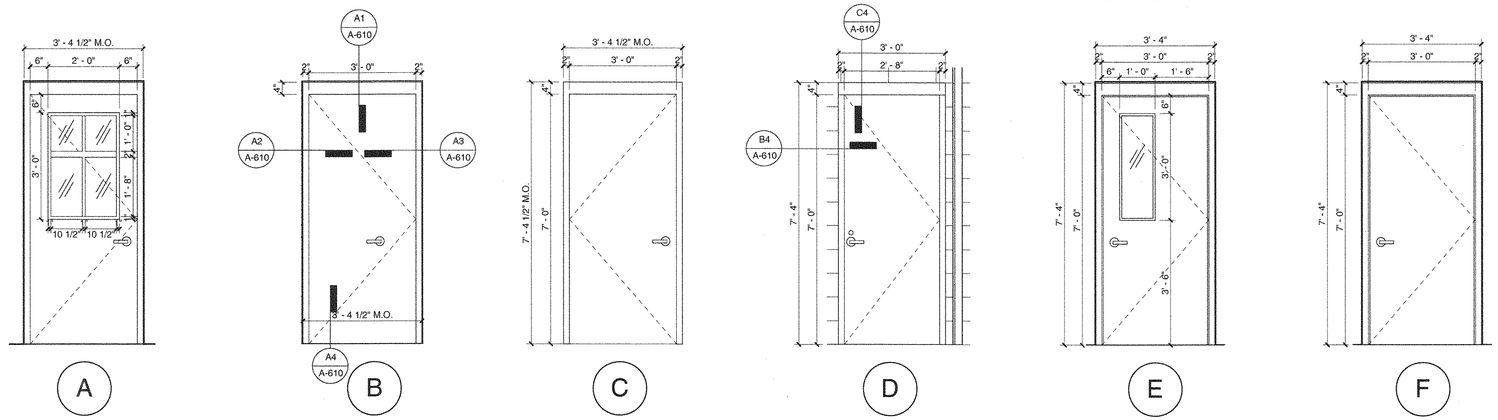

DOOR TYPES

SCALE: 1/2" = 1' - 0"

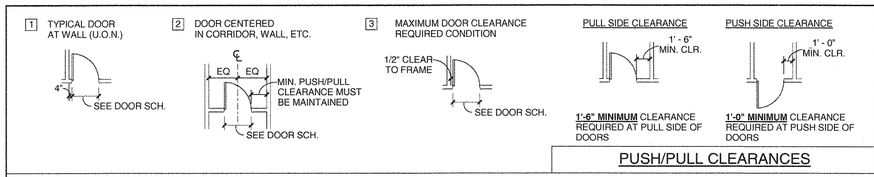

PUSH/PULL CLEARANCES

DOOR DIMENSION NOTES

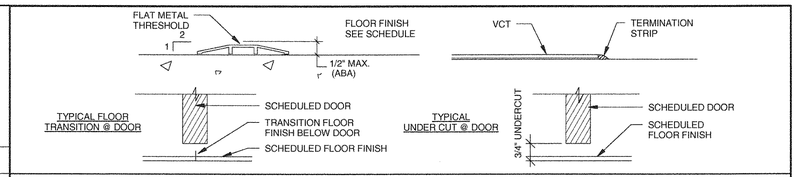

THRESHOLD CONDITIONS

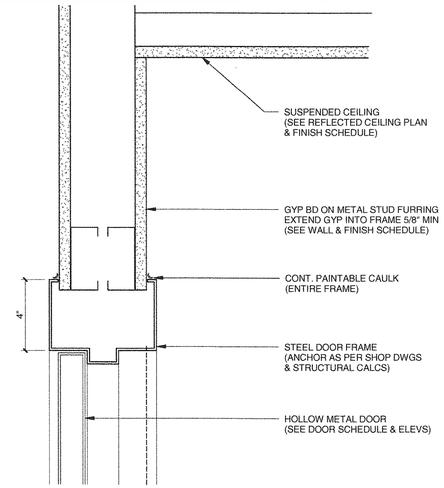

C4 DOOR HEAD @ FRAMED WALL

Section 3" = 1'-0"

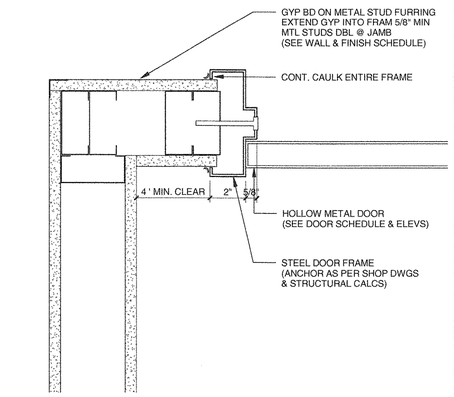

B4 DOOR JAMB @ FRAMED WALL

Section 3" = 1'-0"

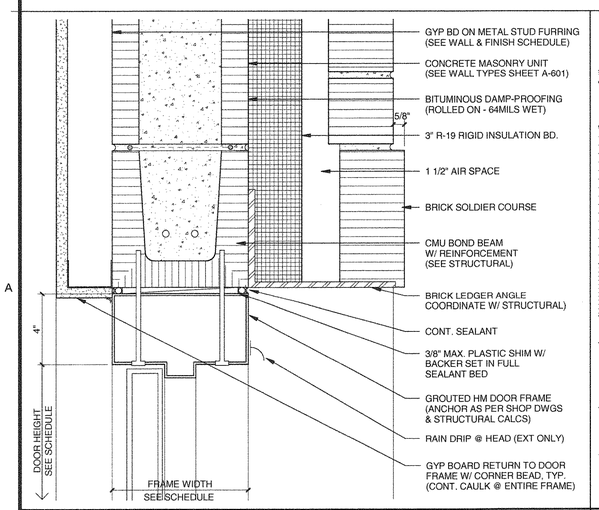

A1 DOOR HEAD @ MASONRY WALL

Section 3" = 1'-0"

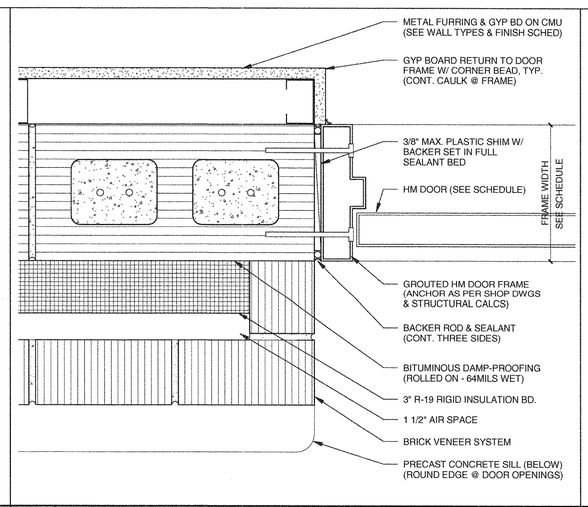

A2 DOOR STRIKE @ MASONRY WALL

Section 3" = 1'-0"

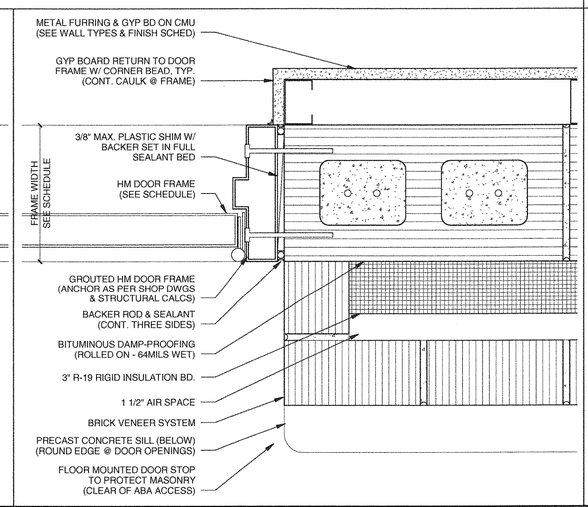

A3 DOOR HINGE @ MASONRY WALL

Section 3" = 1'-0"

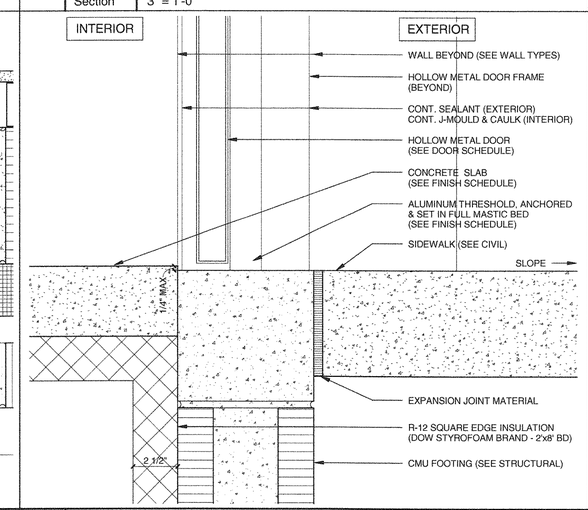

A4 DOOR THRESHOLD @ MASONRY WALL

Section 3" = 1'-0"

CHRISTIAN W. KUHN III, AIA
PROJECT PRINCIPAL
6-1-12
REG. NO. 19166

HASKELL ARCHITECTS and ENGINEERS, P.A.
NORTH CAROLINA - Architecture # 51202, Engineering # C-2136
The Haskell Company
111 Riverside Avenue
Jacksonville, Florida 32202
Phone # (904) 791-4500
HASKELL

MARINE CORPS AIR STATION CHERRY POINT

RECREATIONAL VEHICLE PARK

CHERRY POINT, NORTH CAROLINA

DATE	ISSUE/REVISION
6/11/12	FINAL CD
6/4/12	CI

We hereby expressly reserve the property rights to this drawing and it is not to be reproduced or copied in any format or manner whatsoever without first obtaining our express written permission and consent.

DRAWN BY: MED
CHECKED BY: CWK

AE JOB NUMBER
6601490

DOOR SCHEDULE, ELEVATIONS & DETAILS

A-610
SHEET NUMBER

6/6/2012 9:28:47 AM
c:\Revit_Local\6601490AM(BATHHOUSE)-medallbe.RVT

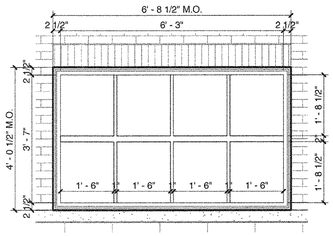

1 WINDOW TYPE 1

1/2" = 1'-0"

FIXED ALUMINUM WINDOW
IMPACT RESISTANT GLAZING??
INSULATED GLAZING W/ APPLIED MUNTINS??

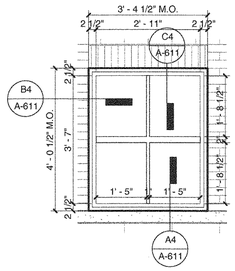

2 WINDOW TYPE 2

1/2" = 1'-0"

FIXED ALUMINUM WINDOW
IMPACT RESISTANT GLAZING??
INSULATED GLAZING W/ APPLIED MUNTINS??

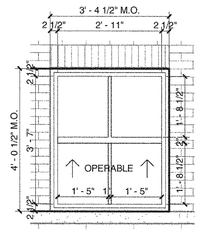

3 WINDOW TYPE 3

1/2" = 1'-0"

ALUMINUM WINDOW
OPERABLE LOWER SASH
IMPACT RESISTANT GLAZING??
INSULATED GLAZING W/ APPLIED MUNTINS??

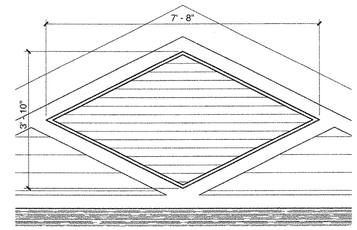

4 LOUVER TYPE 1

1/2" = 1'-0"

ALUMINUM GABLE LOUVER
WEATHER TIGHT & INSECT SCREEN
(SEE MECHANICAL)

WINDOW & LOUVER TYPES

SCALE: 1/2" = 1' - 0"

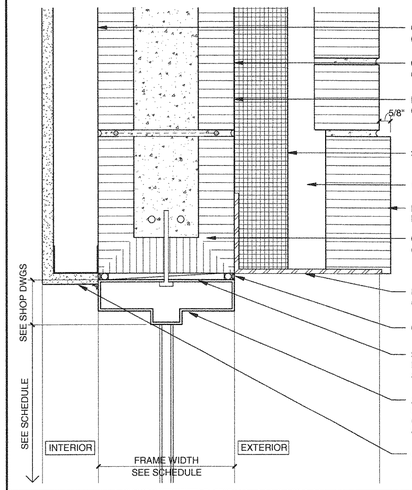

C4 WINDOW HEADER DETAIL

Section 3" = 1'-0"

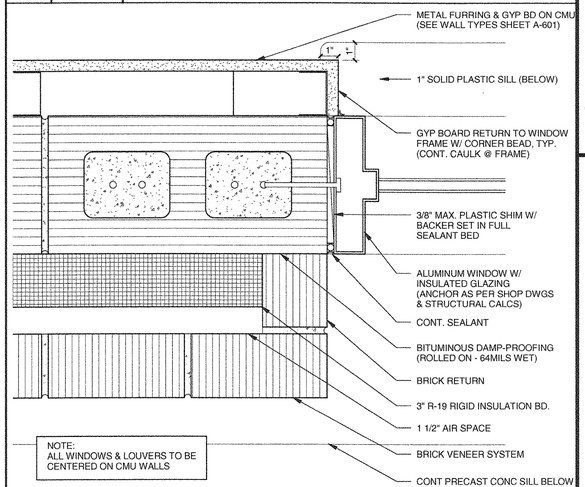

B4 WINDOW JAMB DETAIL

Section 3" = 1'-0"

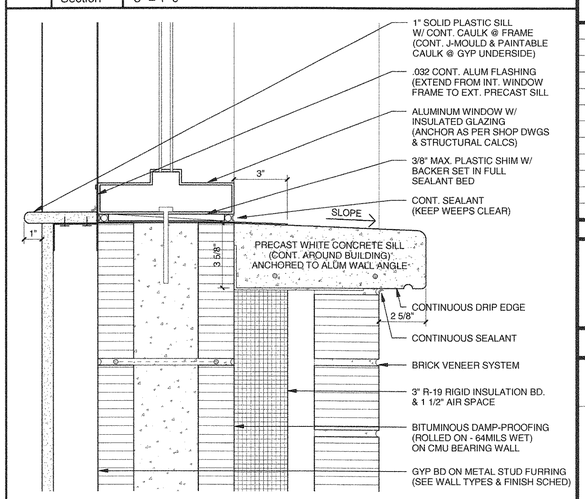

A4 WINDOW SILL DETAIL

Section 3" = 1'-0"

CHRISTIAN W. KUHN III, AIA
PROJECT PRINCIPAL
6-11-12
REGISTERED ARCHITECT

HASKELL ARCHITECTS and ENGINEERS, P.A.
NORTH CAROLINA - Architecture # 51202, Engineering # C-2136

HASKELL®
The Haskell Company
111 Riverside Avenue
Jacksonville, Florida 32202
Phone # (904) 791-4500

MARINE CORPS AIR STATION CHERRY POINT

RECREATIONAL VEHICLE PARK

CHERRY POINT, NORTH CAROLINA

DATE	ISSUE/REVISION
6/11/12	FINAL CD
6/4/12	CI

We hereby expressly reserve the property rights to this drawing and it is not to be reproduced or copied in any format or manner whatsoever without first obtaining our express written permission and consent.

DRAWN BY: MED
CHECKED BY: CWK

HE JOB NUMBER
6601490

WINDOW ELEVATIONS & DETAILS

A-611
SHEET NUMBER

6/6/2012 9:00:37 AM
c:\Revit_Local\6601490\AM(BATHHOUSE)-metallbe.RVT

PLUMBING LEGEND

- SANITARY & WASTE PIPING (S OR W)
- VENT PIPING (V)
- COLD WATER PIPING (CW)
- HOT WATER PIPING (HW) – 110°F UNLESS MARKED DIFFERENTLY
- HOT WATER RETURN (HWR)
- LPG — LP GAS
- INDICATES DIRECTION OF SLOPE
- GATE VALVE
- BALL VALVE
- BALANCING VALVE
- UNION (UN)
- CAP FOR FUTURE CONNECTION
- CHECK VALVE
- BACKFLOW PREVENTER (BFP)
- FLOOR CLEANOUT (GCO)
- FLOOR CLEANOUT (FCO)
- WALL CLEANOUT WITH ACCESS COVER (WCO)
- WALL HYDRANT
- HOSE BIBB W/ VACUUM BREAKER
- DETAIL, RISER OR SECTION NUMBER
- SHEET NUMBER WHERE DETAIL, RISER, OR SECTION IS DRAWN
- FLOOR DRAIN (FD)

ABBREVIATIONS

ABV	=	ABOVE
AFF	=	ABOVE FINISHED FLOOR
APPROX.	=	APPROXIMATE
AW	=	ACID WASTE
AWS	=	ACID WASTE STACK
AVS	=	ACID VENT STACK
BLW	=	BELOW
CD	=	CONDENSATE DRAIN
CLG	=	CEILING
CO	=	CLEANOUT
CONN	=	CONNECT
CONT	=	CONTINUED
CU FT	=	CUBIC FEET
DN	=	DOWN
DWG.	=	DRAWING
ECO	=	EXTERIOR CLEANOUT
EXIST., EX.	=	EXISTING
EWC	=	ELECTRIC WATER COOLER
EWS	=	EMER. EYEWASH/SHOWER
EWT	=	ENTERING WATER TEMPERATURE
F	=	FAHRENHEIT
FA	=	FIRE ALARM
FL	=	FLOOR
FCO	=	FLOOR CLEANOUT
FD#	=	FLOOR DRAIN
FS	=	FLOOR SINK
FTG	=	FOOTING
GAL.	=	GALLON
GPM	=	GALLONS PER MINUTE
GPF	=	GALLONS PER FLUSH
GPU	=	GALLONS PER USE
GW	=	GREASE WASTE
HB	=	HOSE BIBB
HC	=	HVAC CONTRACTOR
HP	=	HORSEPOWER
HR	=	HOUR
I.E.	=	INVERT ELEVATION
KW	=	KILOWATT
LWT	=	LEAVING WATER TEMPERATURE
MAX.	=	MAXIMUM
MEZZ.	=	MEZZANINE
MIN.	=	MINIMUM
MTD.	=	MOUNTED
N.C.	=	NORMALLY CLOSED
N.O.	=	NORMALLY OPEN
NTS	=	NOT TO SCALE
OW	=	OILY WASTE
PDI	=	PLUMBING DRAINAGE INSTITUTE
PSI	=	POUNDS PER SQUARE INCH
P.O.C.	=	POINT OF CONNECTION
PRESS	=	PRESSURE
PSIG	=	PSI GAGE
RAD	=	REFRIGERATED AIR DRYER
RPZ	=	REDUCED PRESSURE ZONE
SH	=	SHOWER
SS	=	SOIL STACK
SRD	=	SECONDARY ROOF DRAIN
SCH	=	SCHEDULE
SOV	=	SHUT OFF VALVE
ST	=	STORM DRAIN
T & P	=	TEMPERATURE & PRESSURE
TP	=	TRAP PRIMER
TYP.	=	TYPICAL
UG	=	UNDERGROUND
VFD	=	VARIABLE FREQUENCY DRIVE
V	=	VENT
VTR	=	VENT THRU ROOF
W	=	WASTE
W/TP	=	WITH TRAP PRIMER
WCO	=	WALL CLEANOUT
WH	=	WALL HYDRANT
WHA	=	WATER HAMMER ARRESTER "PDI TYPE"
WS	=	WASTE STACK

PLUMBING GENERAL NOTES

1. PROVIDE SHUT–OFF VALVES FOR BOTH HOT & COLD DOMESTIC WATER PIPING FEEDING GROUPS OF FIXTURES.
2. PROVIDE ALL EXTERIOR WALL HYDRANTS WITH SHUT–OFF BALL VALVES IMMEDIATELY INSIDE ABOVE THE CEILING OR OTHER ACCESSIBLE LOCATION.
3. INSTALL WATER HAMMER ARRESTORS WHERE DIRECTED BY CODE (SIZE PER PDI STANDARDS).
4. PROVIDE CLEANOUTS AS DIRECTED BY PLUMBING CODE.
5. INSTALL EXTERIOR WALL HYDRANTS MIN. 18" ABOVE FINISHED GRADE, FIT IN ONE STANDARD MODULAR BRICK COURSE.
6. SLOPE WASTE PIPE A MINIMUM OF 1/8" PER FOOT UNLESS NOTED OTHERWISE. PIPE SIZES 2" AND SMALLER SHALL BE SLOPED 1/4" PER FOOT MINIMUM.
7. PROVIDE SLEEVES AS REQUIRED BY PLUMBING CODE (IPC 2009)
8. ALL PIPE PENETRATIONS THRU WALLS AND CEILING SHALL BE PROPERLY SEALED IN ACCORDANCE WITH THE U.L. LISTING FOR EACH OCCURANCE. REFER TO ARCHITECTURAL PLANS FOR U.L. LISTED ASSEMBLIES.
9. PROVIDE INSULATION (SIZE PER CODE) ON ALL DOMESTIC COLD, HOT, AND HOT WATER RETURN PIPING. PROVIDE VAPOR BARRIER JACKET.
10. PROVIDE APPROVED ADA INSULATION ON P–TRAPS, STOPS, AND SUPPLIES ON ALL FIXTURES DESIGNATED AS HANDICAPPED.
11. ALL WORK & MATERIAL SHALL BE PROVIDED & INSTALLED IN COMPLIANCE WITH ALL CODES AS ADOPTED & AMENDED BY THE INSPECTING AUTHORITY. NOTHING IN THESE DRAWINGS IS TO BE CONSTRUED TO PERMIT WORK NOT CONFORMING TO THESE CODES.
12. EXACT LOCATIONS & MOUNTING HEIGHTS OF PLUMBING FIXTURES SHALL BE OBTAINED FROM THE ARCHITECTURAL DRAWINGS.
13. FCO'S SHALL BE INSTALLED FLUSH TO FINISHED FLOOR. INSTALL FCO's AS CLOSE TO HIGH POINT AS POSSIBLE. NO DISHING PERMITTED.
14. ALL VENT PIPING SHALL BE FULL LINE SIZE IF A WCO IS SHOWN, OR AS DIRECTED BY LOCAL, STATE CODES.
15. ALL PLUMBING FIXTURE VENTS SHALL TERMINATE A MIN. OF 12 INCHES FROM ANY VERTICAL SURFACE & 10 FEET FROM ANY OUTSIDE AIR INTAKES.
16. ALL PLUMBING WORK SHALL BE INSTALLED TO AVOID INTERFERENCE WITH ELECTRICAL & MECHANICAL EQUIPMENT & STRUCTURAL FRAMING. INSTALL EQUIPMENT SUCH THAT REMOVAL DOES NOT REQUIRE REMOVAL OF CONNECTED PIPING.
17. BEFORE COMMENCEMENT OF WORK, CONTRACTOR SHALL VERIFY THE EXACT LOCATIONS, ELEVATIONS & CHARACTERISTICS OF ALL UTILITIES & PIPING. AND SHALL NOTIFY THE ARCHITECT/ENGINEER OF ANY DISCREPANCIES.
18. INSULATE ALL EXPOSED PVC LOCATED IN RETURN AIR PLENUM SPACES WITH APPROVED FIRE WRAP INSULATION, OR USE METAL PIPE THROUGHOUT.
19. ALL WASTE PIPING SHOWN ON THESE DRAWINGS IS LOCATED BELOW FLOOR SLAB (UNLESS NOTED OTHERWISE). ALL DOMESTIC WATER AND VENT PIPING IS LOCATED ABOVE THE CEILING (UNLESS NOTED OTHERWISE).
20. ALL FLOOR DRAINS SHALL BE EQUIPPED WITH TRAP PRIMER CONNECTIONS. TRAP PRIMERS THAT REQUIRE A PRESSURE DROP TO ACTIVATE SHALL NOT BE INSTALLED BELOW LAVATORY FIXTURES WITH .5 GPM FLOW AERATORS.
21. ALL WASTE PIPING SHOWN ON THESE DRAWINGS IS LOCATED BELOW FLOOR SLAB (UNLESS NOTED OTHERWISE). ALL DOMESTIC WATER AND VENT PIPING IS LOCATED ABOVE THE CEILING (UNLESS NOTED OTHERWISE).

HASKELL ARCHITECTS and ENGINEERS, P.A.
NORTH CAROLINA – Architecture # 51202, Engineering # C–2136
HASKELL
America's Design-Build Leader®
The Haskell Company
111 Riverside Avenue
Jacksonville, Florida 32202
Phone # (904) 791-4500

MARINE CORPS AIR STATION CHERRY POINT
RECREATIONAL VEHICLE PARK
CHERRY POINT, NORTH CAROLINA

DATE	ISSUE/REVISION
06/11/12	FINAL CDs
06/04/12	CI
04/09/12	OPT.2_95%

We hereby expressly reserve the property rights to this drawing and it is not to be reproduced, copied in any format or manner whatsoever without first obtaining our express written permission and consent.

DRAWN BY: JPB
CHECKED BY: TJT
AE JOB NUMBER 6601490

PLUMBING LEGEND, NOTES & ABBREVIATIONS

P-001
SHEET NUMBER

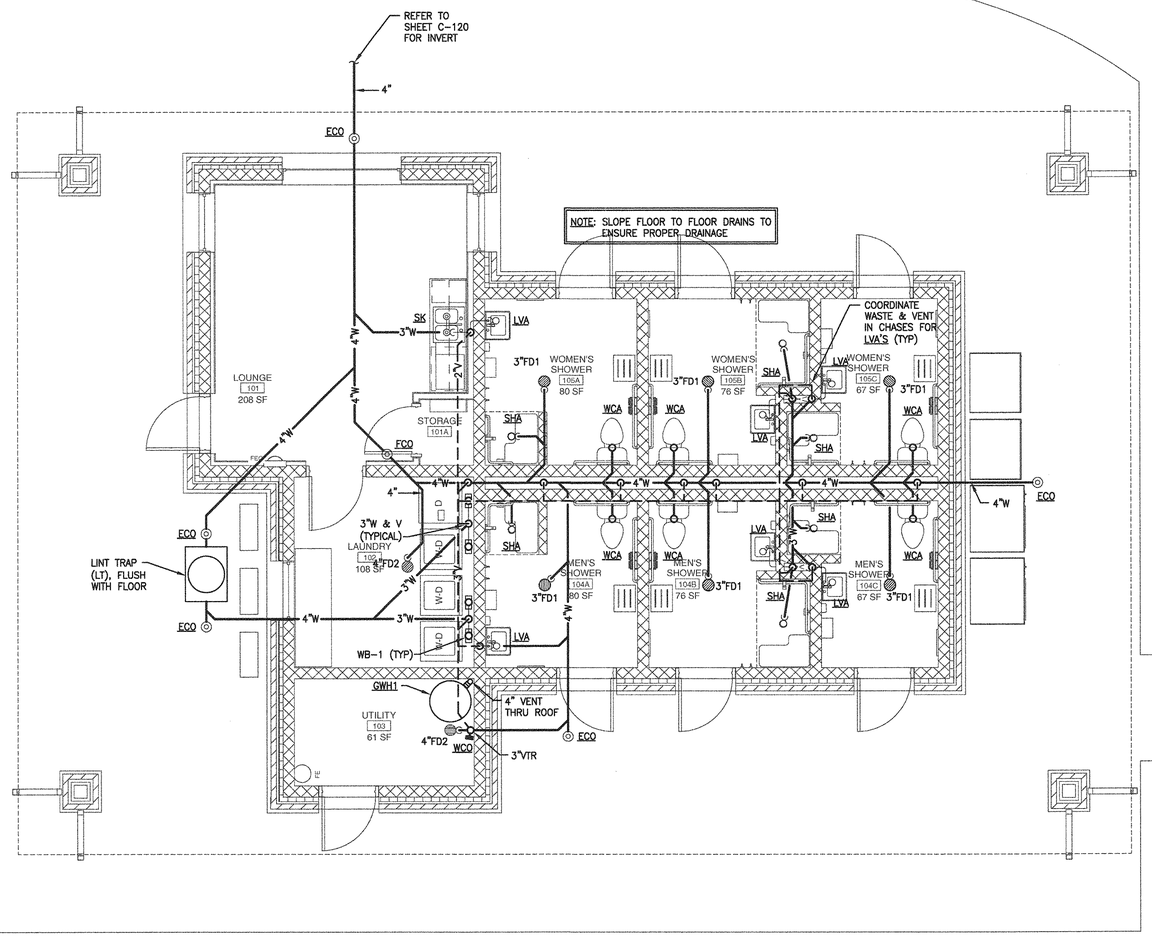

1 ENLARGED BATH HOUSE - DRAINAGE

Scale: 1/4"=1'-0"

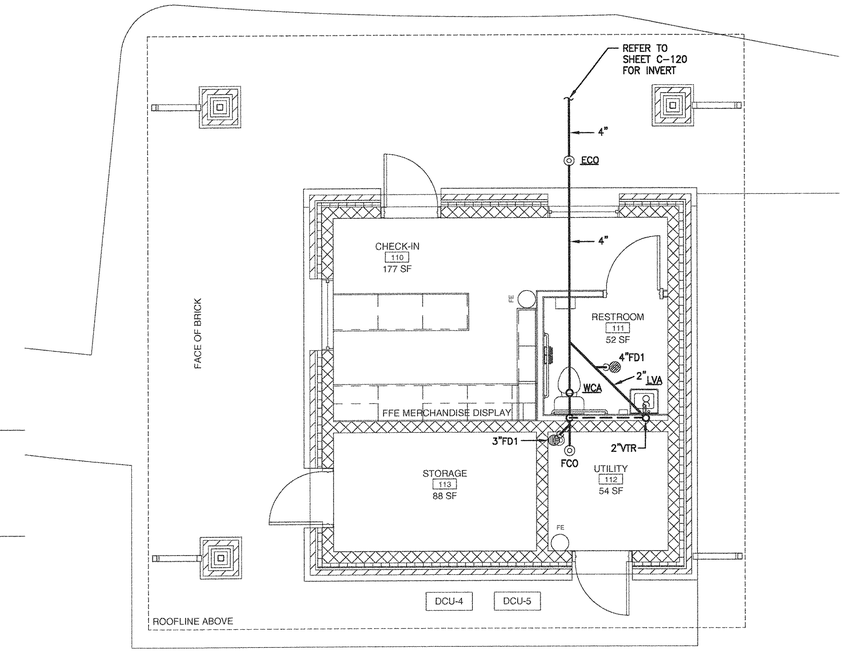

2 ENLARGED CHECK-IN BUILDING - DRAINAGE

Scale: 1/4"=1'-0"

HASKELL ARCHITECTS and ENGINEERS, P.A.
NORTH CAROLINA – Architecture # 51202, Engineering # C-2136
The Haskell Company
111 Riverside Avenue
Jacksonville, Florida 32202
Phone # (904) 791-4500
America's Design-Build Leader®

MARINE CORPS AIR STATION CHERRY POINT

RECREATIONAL VEHICLE PARK

CHERRY POINT, NORTH CAROLINA

DATE	ISSUE/REVISION
06/11/12	FINAL CDs
05/04/12	CI
04/09/12	OPT.2_95%
7/14/11	QDP
7/1/11	PR

We hereby expressly reserve the property rights to this drawing and it is not to be reproduced, copied in any format or manner whatsoever without first obtaining our express written permission and consent.

DRAWN BY: JPB
CHECKED BY: TJT

AE JOB NUMBER 6601490

PLUMBING DRAINAGE FLOOR PLAN

P-110

SHEET NUMBER

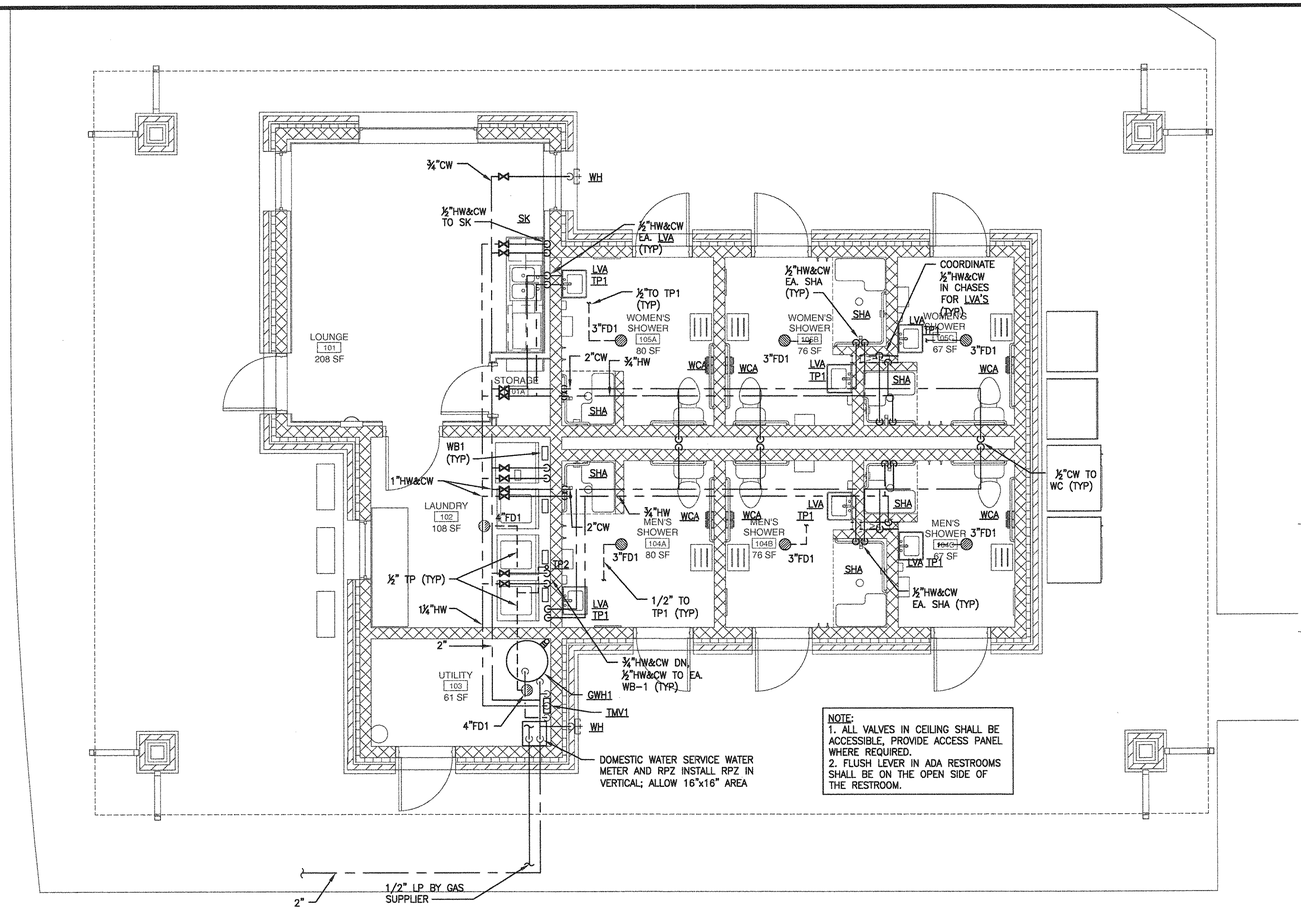

NOTE:
1. ALL VALVES IN CEILING SHALL BE ACCESSIBLE, PROVIDE ACCESS PANEL WHERE REQUIRED.
2. FLUSH LEVER IN ADA RESTROOMS SHALL BE ON THE OPEN SIDE OF THE RESTROOM.

1 ENLARGED BATH HOUSE - UTILITIES
Scale: 1/4"=1'-0"

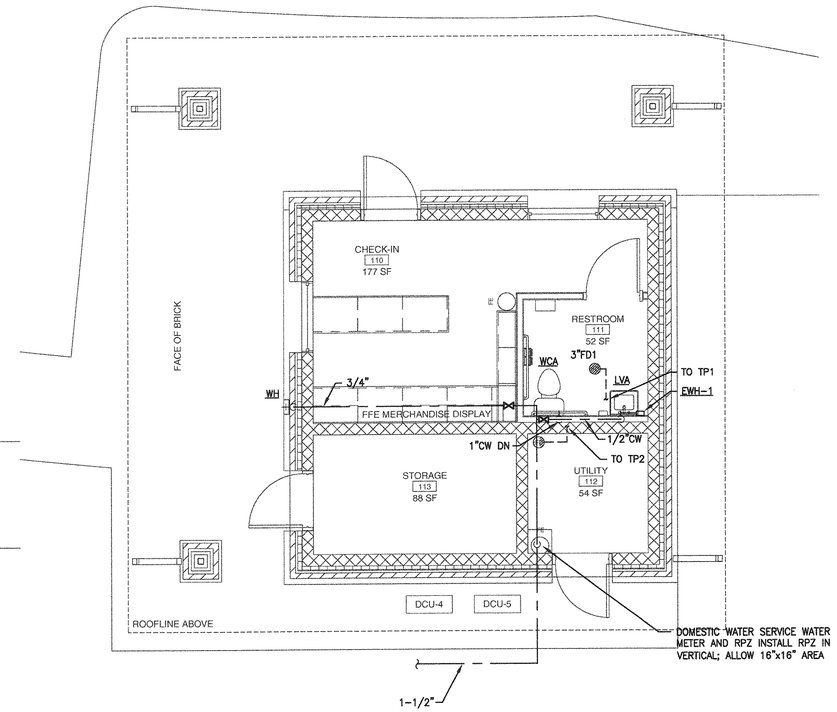

2 ENLARGED CHECK-IN BUILDING - UTILITIES
Scale: 1/4"=1'-0"

REGISTERED PROFESSIONAL ENGINEER
T.J. Thomas
6-11-12
REG. NO. 19142

HASKELL ARCHITECTS and ENGINEERS, P.A.
NORTH CAROLINA – Architecture # 51202, Engineering # C-2136
HASKELL
America's Design-Build Leader®
The Haskell Company
111 Riverside Avenue
Jacksonville, Florida 32202
Phone # (904) 791-4500

MARINE CORPS AIR STATION CHERRY POINT
RECREATIONAL VEHICLE PARK
CHERRY POINT, NORTH CAROLINA

DATE	ISSUE/REVISION
06/11/12	FINAL CDs
06/04/12	CI
04/19/12	OPT.2_95%
7/14/11	QDP
7/1/11	PR

We hereby expressly reserve the property rights to this drawing and it is not to be reproduced, copied in any format or manner whatsoever without first obtaining our express written permission and consent.

DRAWN BY: JPB
CHECKED BY: TJT

AE JOB NUMBER
6601490

PLUMBING UTILITIES FLOOR PLAN

P-111
SHEET NUMBER

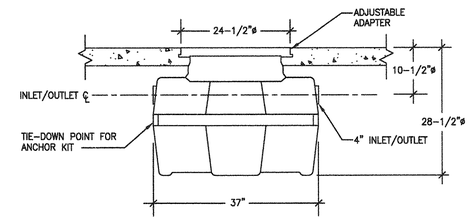

LINT TRAP DETAIL (C3)

SCALE:

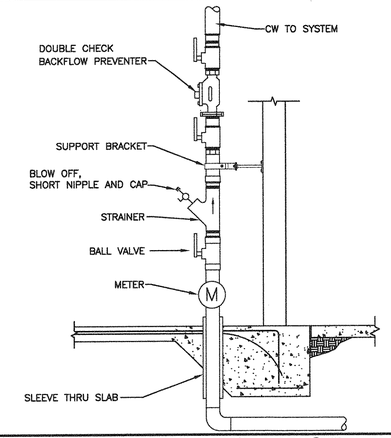

DOMESTIC WATER SERVICE DETAIL (C2)

SCALE:

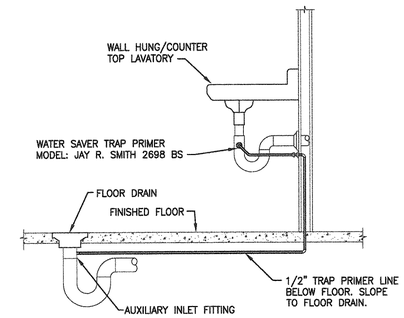

LAVATORY TRAP PRIMER DETAIL (C1)

SCALE: NO SCALE

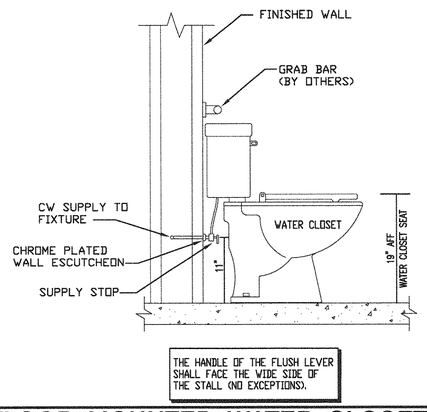

FLOOR MOUNTED WATER CLOSET DETAIL (B4)

SCALE:

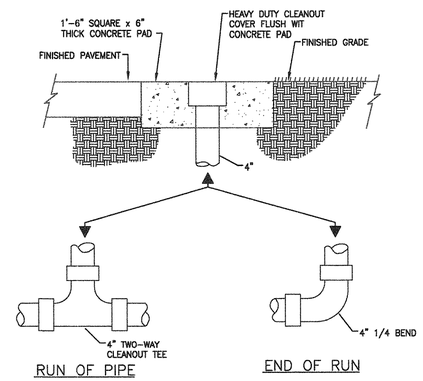

EXTERIOR FLOOR CLEANOUT (ECO) DETAIL (B3)

SCALE: NO SCALE

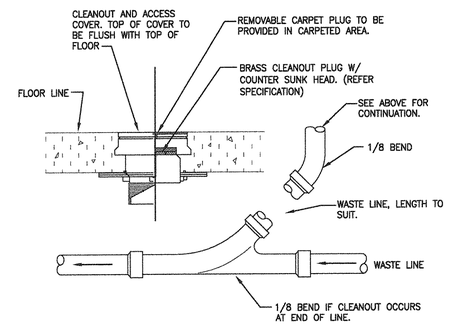

TYPICAL FLOOR CLEANOUT (FCO) DETAIL (B2)

SCALE: NO SCALE

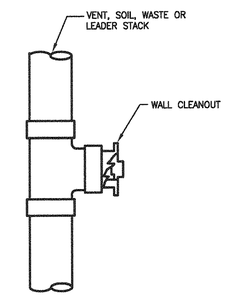

TYPICAL WALL CLEANOUT (WCO) DETAIL (B1)

SCALE: NO SCALE

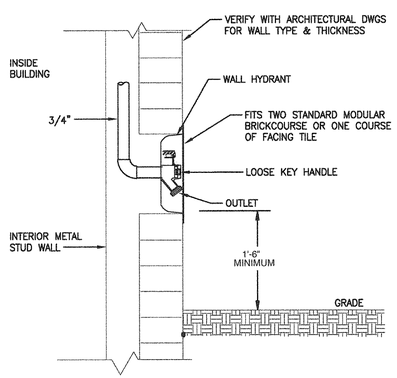

WALL HYDRANT DETAIL (A4)

SCALE:

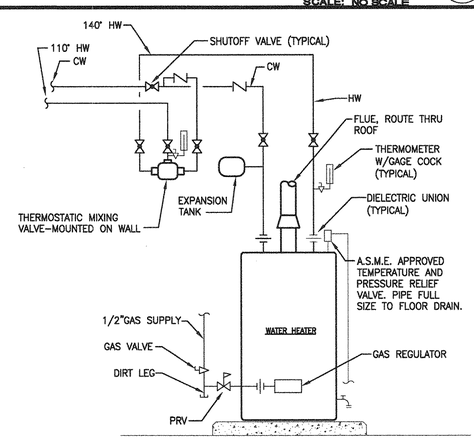

CLEVIS TYPE PIPE HANGER DETAIL (A3)

SCALE: NO SCALE

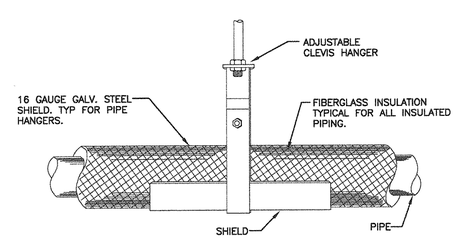

CLEVIS TYPE PIPE HANGER DETAIL (A2)

SCALE: NO SCALE

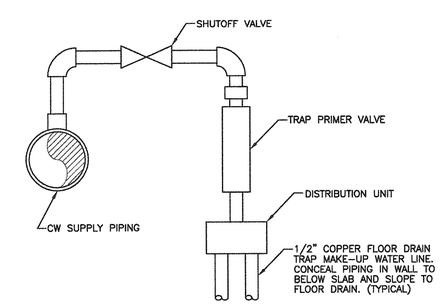

TRAP PRIMER (TP2) DETAIL (A1)

SCALE: NO SCALE

HASKELL ARCHITECTS and ENGINEERS, P.A.
NORTH CAROLINA - Architecture # 51202, Engineering # C-2136
HASKELL
America's Design-Build Leader
The Haskell Company
111 Riverside Avenue
Jacksonville, Florida 32202
Phone# (904) 791-4500

MARINE CORPS AIR STATION CHERRY POINT

RECREATIONAL VEHICLE PARK

CHERRY POINT, NORTH CAROLINA

DATE	ISSUE/REVISION
06/11/12	FINAL CDs
06/04/12	CI
04/09/12	OPT.2_95%

We hereby expressly reserve the property rights to this drawing and it is not to be reproduced, copied in any format or manner whatsoever without first obtaining our express written permission and consent.

DRAWN BY: JPB
CHECKED BY: TJT

AE JOB NUMBER
6601490

PLUMBING DETAILS

P-501
SHEET NUMBER

PLUMBING FIXTURE SCHEDULE

MARK	FIXTURE	MANUFACTURER	MODEL NUMBER	DESCRIPTION	PIPE SIZES MIN. CW	HW	SAN	VENT
WCA1	WATER CLOSET (ACCESSIBLE)	SLOAN	WETS 9023-1.6	FLOOR MOUNTED, VITREOUS CHINA, FLUSH TANK, 1.6 GPF, ADA HEIGHT.	1/2"	--	4"	2"
LVA	LAVATORY	SLOAN	SS-3003	WALL MOUNT ADA LAVATORY WITH BACKSPLASH, 4" CENTER DRILLING.	1/2"	1/2"	1-1/2"	1-1/2"
	FAUCET	DELTA	22C151	SOLID CAST BRASS FAUCET WITH VANDAL RESISTANT SINGLE LEVER CONTROL, 4" CENTER MOUNTING. PROVIDE 1-1/4" P-TRAP, GRID STRAINER, **.5** GPM AERATOR, LOOSE KEY STOPS & SUPPLIES, TRAP PROWRAP OR EQUAL				
SK	SINK (LOUNGE)	ELKAY	PSR3322	STAINLESS STEEL, DOUBLE BOWL, COUNTER MOUNTED SINK.	1/2"	1/2"	1-1/2"	1-1/2"
	FAUCET	DELTA	100LF-HDF	SINGLE HANDLE KITCHEN DECK MOUNTED FAUCET, 1.5 GPM AERATOR OUTLET, W/ SIDE SPRAY 1-1/2" P-TRAP, 3-1/2" CRUMB CUP STRAINER, LOOSE KEY STOPS AND SUPPLIES.				
SHA	SHOWER (ACCESSIBLE)	SYMMONS	C-96-300-B30-V-X	COMMERCIAL SERIES PRESSURE BALANCED SHOWER VALVE, WITH **1.5 GPM** HANDHELD SHOWER.	1/2"	1/2"	2"	2"

GAS WATER HEATER SCHEDULE

ID No.	LOCATION	STORAGE (GALLONS)	EWT (DEG. F)	LWT (DEG. F)	REC. (GPH)	NATURAL GAS	INPUT (BTU) PROPANE	EFFICIENCY	MANUFACTURER	MODEL NUMBER	NOTES
GWH-1	MEP 125	60	60	140	173	120,000	--	96%	AO SMITH	BTH-120	1,2

NOTES:
1 PROVIDE VENTING, AND EXHAST IN ACCORDANCE WITH MANUFACTURERS RECOMMENDATIONS
2 PROVIDE EXPANSION TANK MODEL ST-5 (AMTROL) OR EQUAL.

ELECTRIC WATER HEATER SCHEDULE

ID No.	LOCATION	STORAGE (GALLONS)	REC. (GPH)	EWT (DEG. F)	LWT (DEG. F)	VOLTS	PHASE	TOTAL KW.	MANUFACTURER	MODEL NUMBER	NOTES
EWH-1	RESTROOM 143	--	-	60	110	240	1	5.5	EEMAX	EX55T	

DRAIN AND SPECIALTY SCHEDULE

ID No.	ITEM	MANUFACTURER	MODEL	DESCRIPTION
FD1	FINISHED FLOOR DRAIN	ZURN	ZB-415-P	CAST IRON, 6"X6" TOP. FLOOR AND SHOWER DRAIN
FD2	EQUIPMENT ROOM DRAIN	ZURN	Z540-P	CAST IRON, 9" DIA. MEDIUM DUTY DRAIN WITH SUR-SET BUCKET
WB1	WASHER MACHINE BOX	GUY GRAY	T200 SERIES	WASHING MACHINE WASTE, AND WATER BOX - 1/2"H & C, 2"W
WH	WALL HYDRANT	WOODFORD	B65	ENCASED NON-FREEZE, ANTI-SIPHON, AUTOMATIC DRAINING
TMV1	THERMOSTATIC MIXING VALVE	LEONARD	TM-26-E	THERMOMETER, AND OUTLET BALL VALVE SHUTOFF
WHA-A	WATER HAMMER ARRESTER	ZURN	Z1700-100	STAINLESS STEEL SHOKTROL WATER HAMMER ARRESTOR
WHA-B	WATER HAMMER ARRESTER	ZURN	Z1700-200	STAINLESS STEEL SHOKTROL WATER HAMMER ARRESTOR
WHA-C	WATER HAMMER ARRESTER	ZURN	Z1700-300	STAINLESS STEEL SHOKTROL WATER HAMMER ARRESTOR
FCO	FINISHED FLOOR CLEANOUT	ZURN	Z1400	ADJUSTABLE FLOOR CLEANOUT, CAST IRON
ECO	(EXTERIOR) GRADE CLEANOUT	ZURN	Z1400-HD	ADJUSTABLE FLOOR CLEANOUT, WITH HEAVY DUTY CAST IRON COVER
WCO	WALL CLEANOUT	ZURN	Z1441	CAST IRON BODY WITH STAINLESS STEEL ACCESS COVER
LT	LINT TRAP	SCHIER	PS-50-S	POLYETHYLENE LINT SOLIDS INTERCEPTOR, 52 GALLON CAPACITY
TP1	TRAP PRIMER - TAIL PIECE	PPP	LTP-1500	TAIL PIECE TRAP PRIMING ASSEMBLY
TP2	TRAP PRIMER VALVE	PPP	PR-500LL	TRAP PRIMING VALVE FOR TWO FLOOR DRAINS

WATER METER SCHEDULE

ID No.	LOCATION	MFGR	MODEL	METER SIZE	OPERATING RANGE	PRESSURE LOSS AT MAX.
WM-1	MEP/COMM 103	BADGER	M70	1"	1-1/4-70 GPM	6.5 PSI @ 50 GPM
WM-2	MEP/COMM 314	BADGER	M35	3/4"	3/4-35 GPM	5 PSI @ 25 GPM

BACKFLOW PREVENTER SCHEDULE

ID No.	LOCATION	MFGR	MODEL	SIZE
BFP-1	UTILITY 103	WATTS	LF909	2"
BFP-2	UTILITY 112	BADGER	LF909	3/4"

HASKELL ARCHITECTS and ENGINEERS, P.A.
NORTH CAROLINA – Architecture # 51202, Engineering # C–2136
HASKELL
America's Design-Build Leader
The Haskell Company
111 Riverside Avenue
Jacksonville, Florida 32202
Phone # (904) 791-4500

MARINE CORPS AIR STATION CHERRY POINT
RECREATIONAL VEHICLE PARK
CHERRY POINT, NORTH CAROLINA

DATE	ISSUE/REVISION
06/11/12	FINAL CDs
06/04/12	CI
04/09/12	OPT.2_95%
7/14/11	QDP
7/1/11	PR

We hereby expressly reserve the property rights to this drawing and it is not to be reproduced, copied in any format or manner whatsoever without first obtaining our express written permission and consent.

DRAWN BY: JPB
CHECKED BY: TJT
AE JOB NUMBER 6601490

PLUMBING SCHEDULES

P-601
SHEET NUMBER

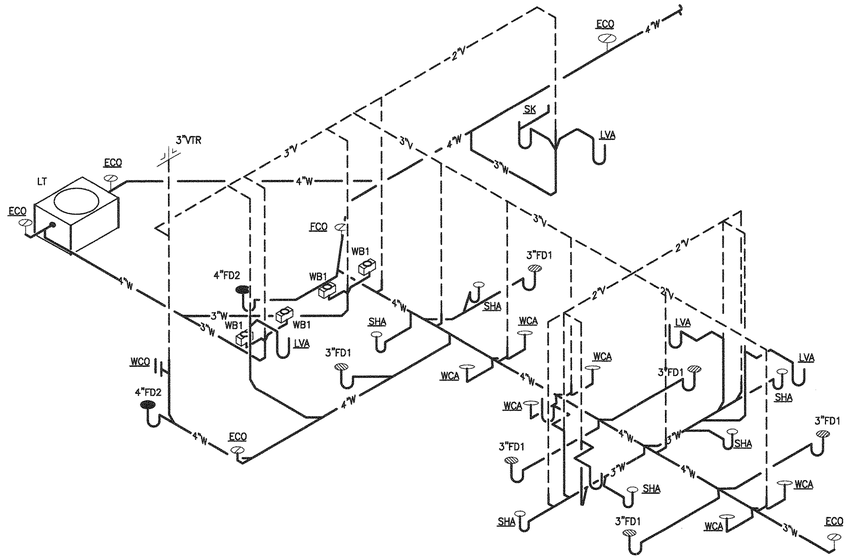

1 BATH HOUSE DRAINAGE RISER DIAGRAM

Scale: N.T.S.

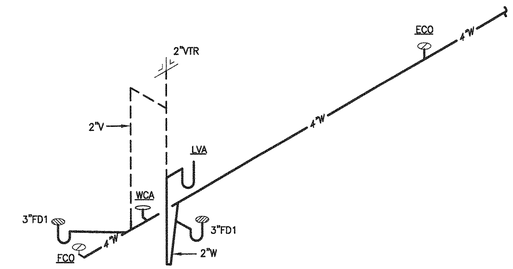

2 CHECK-IN BUILDING DRAINAGE RISER DIAGRAM

Scale: N.T.S.

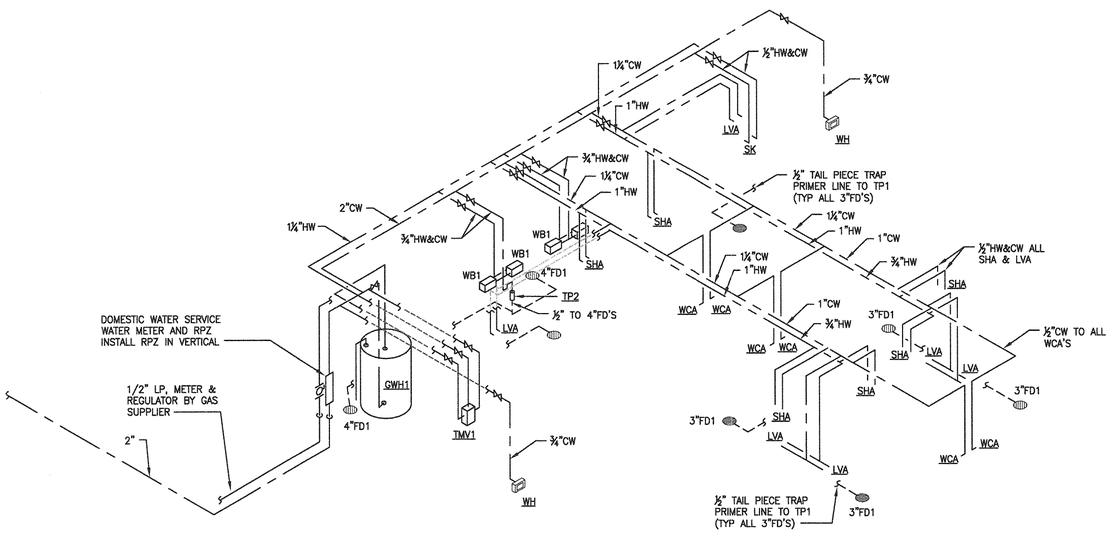

3 BATH HOUSE UTILITY RISER DIAGRAM

Scale: N.T.S.

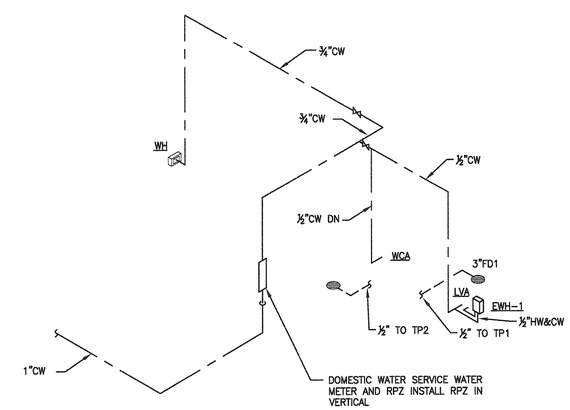

4 CHECK-IN BUILDING UTILITY RISER DIAGRAM

Scale: N.T.S.

HASKELL ARCHITECTS and ENGINEERS, P.A.
NORTH CAROLINA – Architecture # 51202, Engineering # C-2136
The Haskell Company
111 Riverside Avenue
Jacksonville, Florida 32202
Phone # (904) 791-4500
America's Design-Build Leader

MARINE CORPS AIR STATION CHERRY POINT

RECREATIONAL VEHICLE PARK

CHERRY POINT, NORTH CAROLINA

DATE	ISSUE/REVISION
06/11/12	FINAL CDs
06/04/12	CI
04/19/12	OPT.2_95%

We hereby expressly reserve the property rights to this drawing and it is not to be reproduced, copied in any format or manner whatsoever without first obtaining our express written permission and consent.

DRAWN BY: JPB
CHECKED BY: TJT

AE JOB NUMBER
6601490

PLUMBING RISERS

P-701
SHEET NUMBER

ABBREVIATIONS

AC	AIR CURTAIN
ACH	AIR CHANGES PER HOUR
AD	ACCESS DOOR
ADJ	ADJUSTABLE
AFF	ABOVE FINISHED FLOOR
AHU	AIR HANDLING UNIT
ANSI	AMERICAN NATIONAL STANDARDS INSTITUTE
B	BOILER
BDD	BACKDRAFT DAMPER
BHP	BRAKE HORSEPOWER
BOD	BOTTOM OF DUCT
BOL	BOTTOM OF LOUVER
BOP	BOTTOM OF PIPE
BOS	BOTTOM OF STEEL
BTUH	BRITISH THERMAL UNIT PER HOUR
CD	CONDENSATE DRAIN LINE
CFM	CUBIC FEET PER MINUTE
CH	CHILLER
CS	CENTRIFUGAL SEPARATOR
CHP	CHILLED WATER PUMP
CHS	CHILLED WATER SUPPLY
CHR	CHILLED WATER RETURN
CU	SPLIT SYSTEM CONDENSING UNIT
DAC	DUCTLESS SPLIT INDOOR UNIT
DB	DRY BULB
DCU	DUCTLESS SPLIT OUTDOOR UNIT
DDC	DIRECT DIGITAL CONTROL
DEG	DEGREES
DN	DOWN
DWG	DRAWING
DP	DIFFERENTIAL PRESSURE
EAT	ENTERING AIR TEMPERATURE
EUH	ELECTRIC UNIT HEATER
EER	ENERGY EFFICIENCY RATIO
EF	EXHAUST FAN
EL	ELEVATION
ERV	ENERGY RECOVERY VENTILATOR
ESP	EXTERNAL STATIC PRESSURE
ET	EXPANSION TANK
EUH	ELECTRIC UNIT HEATER
EWT	ENTERING WATER TEMPERATURE
EXH	EXHAUST AIR
F	FAHRENHEIT
FCU	FAN COIL UNIT
FLA	FULL LOAD AMPERES
FPM	FEET PER MINUTE
FPS	FEET PER SECOND
FT	FEET OR FOOT
GA	GAGE OF GAUGE
GALV	GALVANIZED
GPM	GALLONS PER MINUTE
HP	HORSEPOWER
HR	HOUR
IN.	INCHES
IN. WG.	INCHES OF WATER GAUGE
KW	KILOWATTS
L	LOUVER
LAT	LEAVING AIR TEMPERATURE
LBS	POUNDS
LWT	LEAVING WATER TEMPERATURE
MAX	MAXIMUM
MBH	BTU PER HOUR (THOUSAND)
MCA	MINIMUM CIRCUIT AMPS
MCC	MOTOR CONTROL CENTER
MD	MOTORIZED DAMPER
MECH	MECHANICAL
MIN	MINIMUM
MISC	MISCELLANEOUS
MOCP	MAXIMUM OVER-CURRENT PROTECTION
NTS	NOT TO SCALE
OA	OUTSIDE AIR
OAT	OUTSIDE AIR TEMPERATURE
P	PUMP
PD	PRESSURE DROP (FEET OF WATER)
POS	POSITIVE
PSI	POUNDS PER SQUARE INCH
PSIG	PSI GAGE
RA	RETURN AIR
RH	RELATIVE HUMIDITY
RH	RELATIVE HUMIDITY
SA	SUPPLY AIR
SD	SMOKE DETECTOR
SEER	SEASONAL ENERGY EFFICIENCY RATIO
SENS	SENSIBLE
SF	SQUARE FEET
SF	SUPPLY FAN
SP	STATIC PRESSURE (INCHES OF WATER)
TEMP	TEMPERATURE
TOD	TOP OF DUCT
TOT	TOTAL
TP	TOTAL PRESSURE
TSP	TOTAL STATIC PRESSURE
T-STAT	THERMOSTAT
TYP	TYPICAL
V	VOLT
VAV	VARIABLE AIR VOLUME
VFD	VARIABLE FREQUENCY DRIVE
VOL	VOLUME
W	WATTS
W/	WITH
W/O	WITH OUT
WB	WET BULB

SEE MECHANICAL SYMBOLS, LEGENDS AND EQUIPMENT SCHEDULES FOR ADDITIONAL ABBREVIATIONS.

DESIGN CONDITIONS (LOUNGE, CHECK-IN, LAUNDRY)

LOCATION	LATITUDE	ELEVATION	WINTER OUTDOOR (FdB)	WINTER INDOOR (FdB)	SUMMER OUTDOOR (FdB)	SUMMER OUTDOOR (FwB)	SUMMER INDOOR (FdB)
CHERRY POINT, NC	34.9	35	23	68	90	78	75

DESIGN CONDITIONS (GROUP TOILETS)

LOCATION	LATITUDE	ELEVATION	WINTER OUTDOOR (FdB)	WINTER INDOOR (FdB)	SUMMER OUTDOOR (FdB)	SUMMER OUTDOOR (FwB)	SUMMER INDOOR (FdB)
CHERRY POINT, NC	34.9	35	23	68	90	–	VENTILATED ONLY

DESIGN CONDITIONS (MEP)

LOCATION	LATITUDE	ELEVATION	WINTER OUTDOOR (FdB)	WINTER INDOOR (FdB)	SUMMER OUTDOOR (FdB)	SUMMER OUTDOOR (FwB)	SUMMER INDOOR (FdB)
CHERRY POINT, NC	34.9	35	23	45	90	–	80

APPLICABLE CODES

2006 INTERNATIONAL BUILDING CODE
2006 INTERNATIONAL MECHANICAL CODE
2006 INTERNATIONAL PLUMBING CODE
2008 NATIONAL ELECTRICAL CODE
2009 LIFE SAFETY CODE

GLOSSARY

FURNISH: PURCHASE AND DELIVER (EQUIPMENT) TO THE JOBSITE ONLY
INSTALL: PROVIDE ALL MISCELLANEOUS MATERIALS & SERVICES (LABOR & MATERIAL) REQUIRED TO MAKE EQUIPMENT OPERATIONAL
PROVIDE: FURNISH & INSTALL
REMARKS: INFORMATION PERTAINING TO ALL ITEMS ON A SCHEDULE
NOTES: INFORMATION PERTAINING ONLY TO INDICATED ITEMS ON A SCHEDULE

AIR DEVICE & TERMINAL UNIT DESIGNATION

INDOOR UNIT DESIGNATIONS

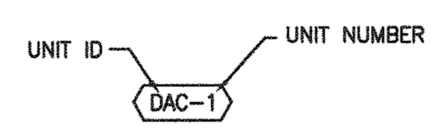

DRAWING INDEX

DRAWING NUMBER	DRAWING TITLE
M-001	HVAC LEGENDS, NOTES & SCHEDULES
M-111	HVAC FLOOR PLANS

PLAN SYMBOLS

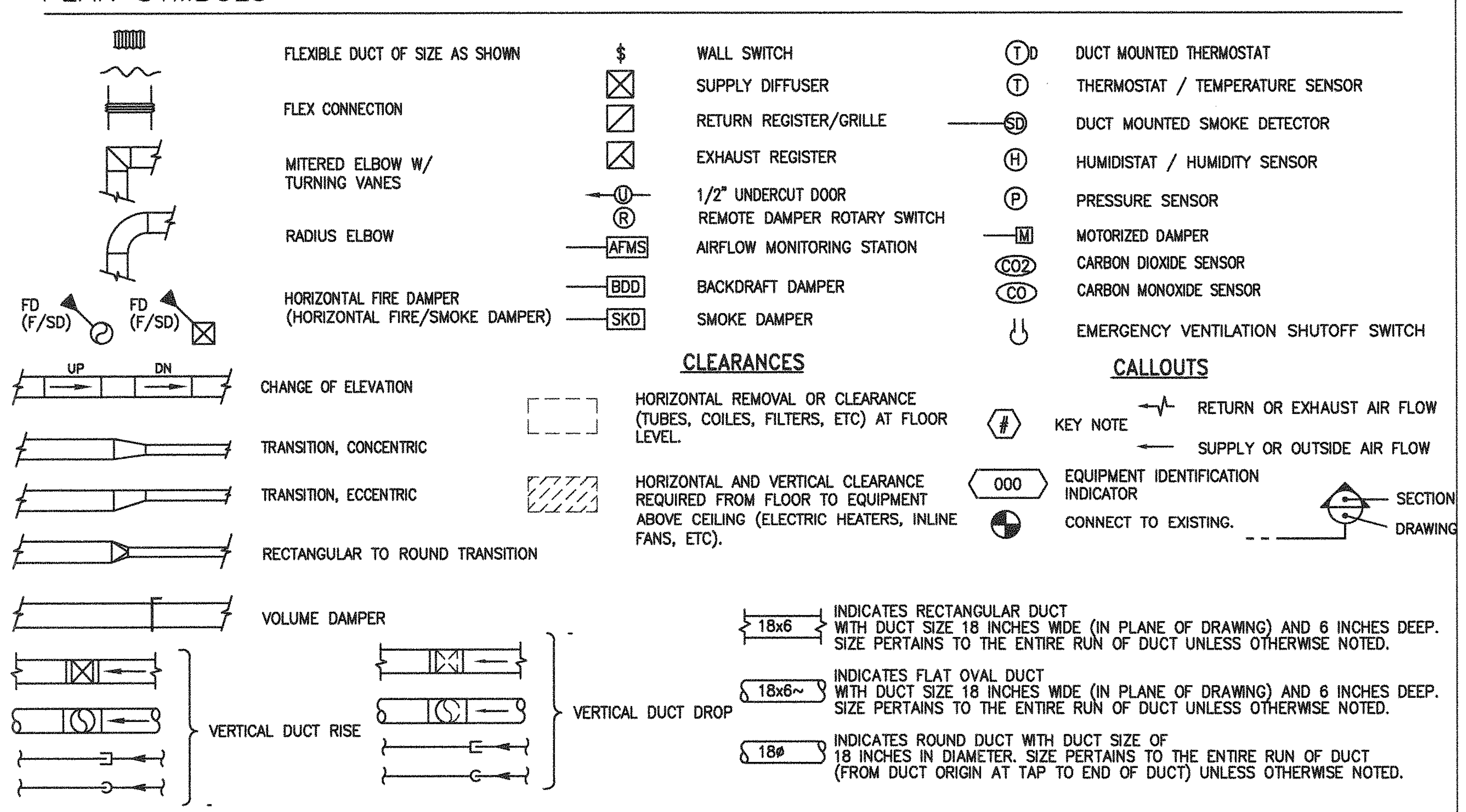

DUCTLESS SPLIT HEAT PUMP SCHEDULE

UNIT DESIGNATION (INDOOR)	AREA SERVED	COOLING BTU/HR	COOLING TONS	HEATING BTU/HR	SUPPLY FAN SUPPLY AIR (CFM)	FAN MOCP	FAN MCA	ELECT ELECT. V-PH-HZ	MFR	MODEL NUMBER	OUTDOOR UNIT DESIGNATION	ELECTRICAL V-PH-HZ	MOCP	MCA	WEIGHT (LBS)	MFR	MODEL NUMBER
DAC-1	LOUNGE 101	12,000	1.0	13,600	318	15	1.2	208-1-60	MR SLIM	MSZ-A12NA	DCU-1	208-1-60	15	12	82	MR SLIM	MUZ-A12NA
DAC-2	LAUNDRY 102	15,000	1.3	18,000	342	15	1	208-1-60	MR SLIM	MSZ-A15NA	DCU-2	208-1-60	15	14	88	MR SLIM	MUZ-A15NA
DAC-3	UTILITY 103	9,000	0.8	10,900	275	15	1.2	208-1-60	MR SLIM	MSZ-A09NA	DCU-3	208-1-60	15	12	82	MR SLIM	MUZ-A09NA
DAC-4	UTILITY 112	9,000	0.8	10,900	275	15	1.2	208-1-60	MR SLIM	MSZ-A09NA	DCU-4	208-1-60	15	12	82	MR SLIM	MUZ-A09NA
DAC-5	CHECK-IN 110	9,000	0.8	10,900	275	15	1.2	208-1-60	MR SLIM	MSZ-A09NA	DCU-5	208-1-60	15	12	82	MR SLIM	MUZ-A09NA

REMARKS: SIZE ALL REFRIGERANT LINES PER MANUFACTURERS RECOMMENDATIONS. PROVIDE FOR LOW AMBIENT OPERATION DOWN TO 0°F. PROVIDE CONDENSATE PUMP FOR DAC-1

FAN SCHEDULE

DESIGNATION	FAN LOCATION	AREA SERVED	TYPE	AIR QUANTITY, CFM	TOTAL STATIC PRESSURE, IN. WG	DRIVE	MAX LOUDNESS, SONES	DRIVE MOTOR, WATTS	ELECTRICAL	MFR	MODEL NUMBER	ROOF/WALL OPENING SIZE (INxIN)	WEIGHT (LBS)	ACCESSORIES
EF-1	CEILING	WOMENS 123	CAB	300	0.2	DIRECT	4	142	115/1/160	COOK	GC-520	N/A	37	1,2,3,4
EF-2	CEILING	MENS 122	CAB	300	0.2	DIRECT	4	142	115/1/160	COOK	GC-520	N/A	37	1,2,3,4
EF-3	CEILING	RESTROOM 316	CAB	80	0.1	DIRECT	1.1	142	115/1/160	COOK	GC-124	N/A	15	1,2,3,4

REMARKS
- A EQUIPMENT SHALL CARRY PERMANENT LABEL INSTALLED BY MANUFACTURER STATING THAT EQUIPMENT COMPLIES WITH ASHRAE/IESNA STANDARD 90.1-2004
- B PROVIDE SINGLE PINT ELECTRICAL CONNECTION. PROVIDE FACTORY INSTALLED TRANSFORMER SIZED FOR ANY AUXILLARY INTERNAL EQUIPMENT AND COMPONENTS
- C PROVIDE SHEET METAL LINER AND 1/2" HARDWARE CLOTH W/METAL FLANGE FOR ALL EXHAUST FANS THAT HAVE NO DUCTWORK (PER NFPA 90A, CHAPTER 2-2.3.3).

ACCESSORIES
- 1 PROVIDE FAN SPEED CONTROL SWITCH
- 2 PROVIDE BACK DRAFT DAMPER
- 3 PROVIDE RUBBER-IN-SHEAR VIBRATION ISOLATORS
- 4 PROVIDE FAN SUPPORT BRACKETS
- 5 PROVIDE ROOF CURB
- 6 PROVIDE MOTORIZED DAMPER

FAN TYPES
CAB-CABINET FAN

ELECTRIC UNIT HEATER SCHEDULE

UNIT ID	LOCATION	ORIENTATION	TYPE	HEATING CAPACITY (KW)	STAGES	AIR FLOW THROUGH COIL, CFM	V-PH-HZ	MFR	MODEL
EUH-1	MENS 104 #1	VERTICAL	WALL	2.25	1	160	208/1/60	INDEECO	WCI-932U03000VW
EUH-2	MENS 104 #2	VERTICAL	WALL	2.25	1	160	208/1/60	INDEECO	WCI-932U03000VW
EUH-3	MENS 104 #3	VERTICAL	WALL	2.25	1	160	208/1/60	INDEECO	WCI-932U03000VW
EUH-4	WOMEN 105 #1	VERTICAL	WALL	2.25	1	160	208/1/60	INDEECO	WCI-932U03000VW
EUH-5	WOMEN 105 #2	VERTICAL	WALL	2.25	1	160	208/1/60	INDEECO	WCI-932U03000VW
EUH-6	WOMEN 105 #3	VERTICAL	WALL	2.25	1	160	208/1/60	INDEECO	WCI-932U03000VW

NOTES
1. PROVIDE KIT FOR RECESSED MOUNTING
2. PROVIDE INTERNAL THERMOSTAT AND INTERNAL RELAY/TRANSFORMER

HVAC NOTES

ALL WORK BY MECHANICAL CONTRACTOR UNLESS SPECIFICALLY NOTED OTHERWISE:

1. REFER TO THE SPECIFICATIONS AND THE FOLLOWING NOTES TO DETERMINE THE FULL SCOPE OF THE WORK AND ACCOUNT FOR ALL ITEMS NECESSARY FOR A COMPLETE AND FUNCTIONING HVAC SYSTEM.
2. MECHANICAL CONTRACTOR SHALL ACCOMMODATE ELECTRICAL , SERVICE ACCESSIBILITY, SPACE REQUIREMENTS, STRUCTURAL FRAMING RESULTING FROM PROVIDING EQUIPMENT VARYING FROM THE BASIS OF DESIGN.
3. REFER TO ARCHITECTURAL DRAWINGS FOR WALL, CEILING AND FLOOR FIRE RATINGS. PROVIDE RATED FIRE DAMPERS OF THE APPROPRIATE FIRE RATING FOR THE INSTALLED LOCATION.
4. MECHANICAL EQUIPMENT SIZE, CONFIGURATION (LEFT RIGHT, TOP, BOTTOM), (UPFLOW/DOWNFLOW), COIL CONNECTION LOCATION & ELECTRICAL CONNECTIONS SHALL BE COORDINATED TO PROVIDE SERVICE ACCESS IN ACCORDANCE WITH MANUFACTURERS DATA AND GOVERNING CODES.
5. MOUNT T-STATS 48" AFF.
6. PROVIDE A 4" THICK CONCRETE HOUSEKEEPING PAD UNDER EACH FLOOR-MOUNTED PIECE OF EQUIPMENT. HOUSEKEEPING PAD SHALL EXTEND 6" BEYOND EQUIPMENT FOOTPRINT IN ALL FOUR DIRECTIONS. COORDINATE SIZE AND LOCATION OF PAD WITH EQUIPMENT PURCHASED. PROVIDE 45-DEGREE CHAMFERED EDGES ON PAD.
7. RETURN AND EXHAUST GRILLES SHALL BE COORDINATED WITH LIGHT FIXTURES.
8. THE SCHEDULED EQUIPMENT REPRESENTS THE BASIS OF DESIGN. IN INSTANCES WHERE THE CONTRACTOR HAS SUBMITTED AND THE HASKELL COMPANY HAS ACCEPTED EQUIPMENT OTHER THAN THE BASIS OF DESIGN, THE CONTRACTOR SHALL PROVIDE FOR ALL REQUIRED CHANGES TO ACCOMMODATE THE SUBSTITUTION AT NO ADDITIONAL CHARGE FROM ANY INVOLVED TRADE, INCLUDING (BUT NOT LIMITED TO) ELECTRICAL SERVICE, STRUCTURAL FRAMING, AND CONCRETE SUPPORT.
9. ALL PENETRATIONS THROUGH EXTERIOR WALLS INCLUDING (BUT NOT LIMITED TO) LOUVERS, FANS, PIPING, VENTS, AND FLUES SHALL BE CAULKED MOISTURE & AIR TIGHT.
10. COORDINATE TEMPERATURE SENSOR LOCATIONS WITH FURNITURE/EQUIPMENT LAYOUTS, WINDOWS AND DOOR SWING AREAS.
11. ALL MECHANICAL AIR MOVING EQUIPMENT ASSOCIATED WITH A GIVEN FIRE ZONE, INCLUDING (BUT NOT LIMITED TO) AHU'S, EF'S AND FCU's SHALL BE WIRED INTO THE FIRE ALARM PANEL AND SHALL SHUTDOWN UPON A RECEIPT OF A GENERAL FIRE ALARM. ALL DUCT-MOUNTED SMOKE DETECTORS SHALL BE WIRED INTO THE FIRE ALARM PANEL. THE ACTIVATION OF A DUCT-MOUNTED SMOKE DETECTOR SHALL: 1) SHUT DOWN THE AIR DISTRIBUTION SYSTEM, 2) ACTIVATE A VISIBLE AND AUDIBLE SUPERVISORY SIGNAL AT A CONSTANTLY ATTENDED LOCATION VIA THE FIRE ALARM SYSTEM, AND 3) CLOSE MECHANICAL UNIT SMOKE DAMPERS (WHERE APPLICABLE).
12. PROVIDE CONDENSATE DRAIN PIPING FOR ALLIINDOOR UNITS WHETHER SHOWN ON THE PLANS OR NOT. PROVIDE COMPLETE SYSTEM WITH DISPOSAL AS ALLOWED BY CODE.
13. ALL WALL OPENINGS SHALL BE FRAMED TO CONCEAL EXPOSED GYPSUM. ALL OPENINGS FOR DUCTS OR DAMPERS IN RATED WALLS SHALL BE FRAMED. COORDINATE WORK WITH SUPERINTENDENT.
14. PROVIDE SUCTION & LIQUID REFRIGERATION PIPING SIZED ACCORDING TO MANUFACTURER'S RECOMMENDATION BASED ON EQUIVALENT LENGTH OF REQUIRED PIPING.
15. PROVIDE CEILING AND DUCTWORK ACCESS PANELS AS REQUIRED FOR BALANCING, OPERATION & MAINTENANCE OF ALL MECHANICAL EQUIPMENT.
16. ALL ELECTRICAL AND CONTROL INSTALLATIONS SHALL COMPLY WITH DIVISIONS 26,27 & 28. ANY CONFLICTS SHALL BE DISCUSSED PRIOR TO INSTALLATION.

REG. NO. 56462

HASKELL ARCHITECTS and ENGINEERS, P.A.
NORTH CAROLINA – Architecture # 51202, Engineering # C-2136

HASKELL
America's Design-Build Leader®
The Haskell Company
111 Riverside Avenue
Jacksonville, Florida 32202
Phone # (904) 791-4500

MARINE CORP AIR STATION CHERRY POINT
RECREATIONAL VEHICLE PARK
CHERRY POINT, NORTH CAROLINA

DATE	ISSUE/REVISION
6/11/12	Final_CDs
06/04/12	CI
4/9/12	OPT.2_95%
7/14/11	QDP

We hereby expressely reserve the property rights to this drawing and it is not to be reproduced, copied in any format or manner whatsoever without first obtaining our express written permission and consent.

DRAWN BY: TWM | CHECKED BY: TJT

AE JOB NUMBER: 6601300

HVAC LEGENDS NOTES & SCHEDULES

M-001
SHEET NUMBER

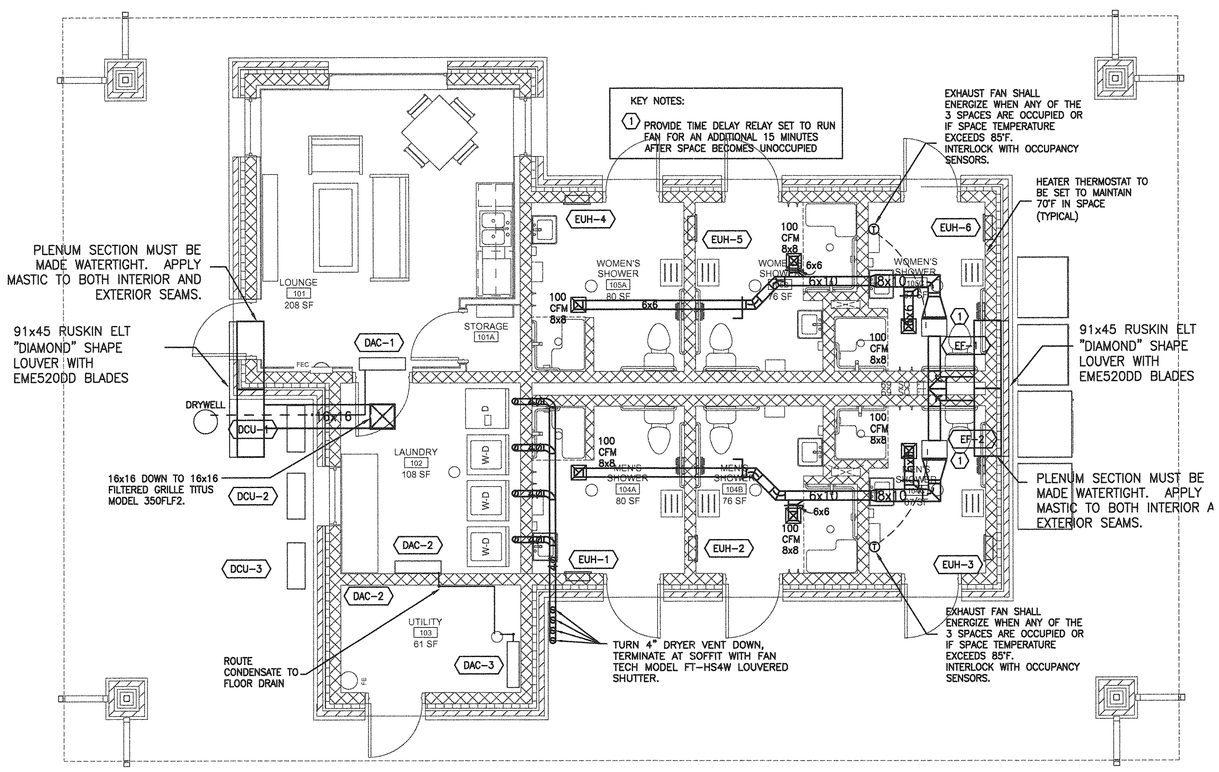

1 BATHHOUSE HVAC PLAN
1/4"=1'

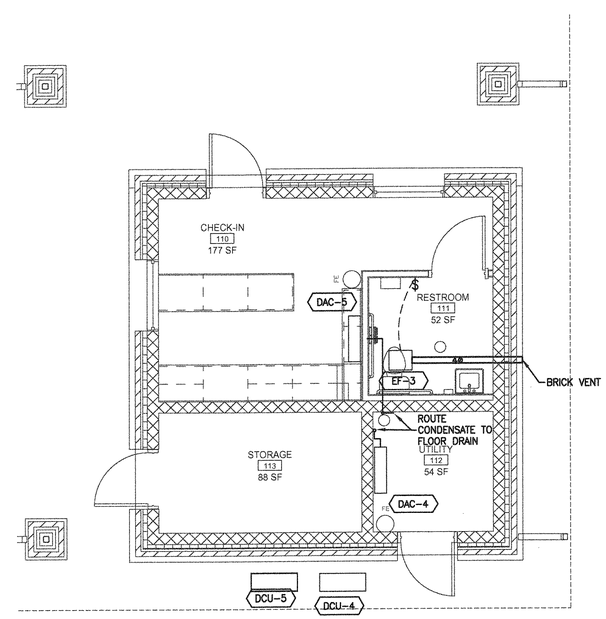

2 CHECK-IN OFFICE HVAC PLAN
1/4"=1'

0 2' 4' 8'
SCALE: 1/4" = 1'-0"

HASKELL ARCHITECTS and ENGINEERS, P.A.
NORTH CAROLINA – Architecture # 51202, Engineering # C-2136
HASKELL
The Haskell Company
111 Riverside Avenue
Jacksonville, Florida 32202
America's Design-Build Leader® Phone # (904) 791-4500

MARINE CORP AIR STATION CHERRY POINT

RECREATIONAL VEHICLE PARK

CHERRY POINT, NORTH CAROLINA

DATE	ISSUE/REVISION
6/11/12	Final CDs
06/04/12	CI
4/09/12	OPT.2_95%
7/14/11	QDP

We hereby expressly reserve the property rights to this drawing and it is not to be reproduced, copied in any format or manner whatsoever without first obtaining our express written permission and consent.

DRAWN BY: TWM
CHECKED BY: TJT

AE JOB NUMBER
6601300

HVAC FLOOR PLANS

M-111
SHEET NUMBER

ELECTRICAL LEGEND

NOTE: ALL SYMBOLS MAY NOT APPLY TO THIS PROJECT.

CONDUIT

UNDERFLOOR OR UNDERGROUND CONDUIT

MANUFACTURED WIRING SYSTEM CABLE SET

BRANCH CIRCUIT HOMERUN – LONG HASHMARK WITH FLAG DENOTES GROUND WIRE, LONG HASHMARK W/O FLAG DENOTES NEUTRAL WIRE, SHORT HASHMARK DENOTES PHASE WIRE NOTE: NO MARKS DENOTES 3 WIRES (PHASE, NEUTRAL, GROUND)

CONDUIT TURNED UP

CONDUIT TURNED DOWN OR DIRECT CONNECTION

ABBREVIATIONS

*	ON ANY SYMBOLS INDICATES MOUNTED 6" C/L ABOVE SINK OR COUNTER FOR COUNTERS WITHOUT BACKSPLASHES AND 4" C/L ABOVE BACKSPLASH FOR COUNTERS WITH BACKSPLASHES.
AC	AIR COMPRESSOR
ACCU	AIR COOLED CONDENSER UNIT
AFF	ABOVE FINISHED FLOOR
AFG	ABOVE GRADE
AHU	AIR HANDLING UNIT
ATS	AUTOMATIC TRANSFER SWITCH
CH	CHILLER
CO	CONDUIT ONLY
CRU	COMPUTER ROOM UNIT
EDH	ELECTRIC DUCT HEATER
EL	EMERGENCY LIGHT
EQ	EQUAL
EWC	ELECTRIC WATER COOLER
GFI	GROUND FAULT INTERRUPTER
IG	ISOLATED GROUND
NL	NIGHTLIGHT
POS	POINT OF SALE
RTU	ROOF TOP UNIT
TE	THERMAL ELEMENT SWITCH
UH	UNIT HEATER
UNSW	UNSWITCHED
UON	UNLESS OTHERWISE NOTED
W	WALL MOUNTED
WP	WEATHER PROOF
WR	WEATHER RESISTANT
VAV	VARIABLE AIR VOLUME UNIT

LIGHTING

LIGHTING SUBSCRIPTS (TYPICAL):
A1 = FIXTURE TYPE
a = SWITCHING
UNSW = UNSWITCHED

FLUORESCENT RECESSED TROFFER LIGHT FIXTURE WITH OUTLET

FLUORESCENT SURFACE LIGHT FIXTURE WITH OUTLET

FLUORESCENT, INCANDESCENT OR HID CEILING MOUNTED OR RECESSED LIGHT FIXTURE

OPTIONAL STAND-BY (CRITICAL) FLUORESCENT LIGHT FIXTURE WITH OUTLET CEILING MOUNTED TRACK AND LIGHT FIXTURES

EGRESS AND/OR NIGHTLIGHT FLUORESCENT LIGHT FIXTURE WITH OUTLET

LIGHT FIXTURES TANDUM WIRED

EMERGENCY AND/OR NIGHTLIGHT FLUOR, INCAND OR HID CEILING MOUNTED OR RECESSED LIGHT FIXTURE

EXIT LIGHT – PROVIDE ARROWS AS REQUIRED

EMERGENCY WALL PACK

EXTERIOR FLOODLIGHT

POLE MOUNTED AREA LIGHT

WALL MOUNTED OR RECESSED LIGHT FIXTURE

EMERGENCY WALL MOUNTED OR RECESSED LIGHT FIXTURE

CEILING FAN – HUNTER MODEL #25517, FLUSH MOUNTED

SINGLE POLE SWITCH
SUBSCRIPT NONE = SINGLE POLE SWITCH
A = DOUBLE SWITCH DEVICE
C = SWITCH FOR CEILING FAN
D = DIMMER SWITCH-2000W (TYP U.O.N.)
F = THERMAL ELEMENT SWITCH
K = SINGLE POLE KEY SWITCH
LM = LOW VOLTAGE MASTER SWITCH
M = MANUAL MOTOR SWITCH
O = WALL MOUNTED OCCUPANCY SENSOR WATTSTOPPER #WA-100
P = SWITCH WITH PILOT LIGHT
T = TIMER SWITCH
V = VOLUME CONTROL SWITCH
2 = TWO-POLE SWITCH
3 = THREE-WAY SWITCH
4 = FOUR-WAY SWITCH
LV = LOW VOLTAGE 3 POSITION, MOMENTARY, CENTER OFF

LIGHTING CONTINUED

CEILING MOUNTED PASSIVE INFRARED OCCUPANCY SENSOR WATTSTOPPER #CI-300-1

CEILING MOUNTED OCCUPANCY SENSOR WATTSTOPPER #W2000H

CEILING MOUNTED OCCUPANCY SENSOR WATTSTOPPER #W2000A

CEILING MOUNTED OCCUPANCY SENSOR WATTSTOPPER #W1000A

WALL MOUNTED OCCUPANCY SENSOR WATTSTOPPER #CB-100
SUBSCRIPT PIR = PASSIVE INFRARED OCCUPACY SENSOR

OCCUPANCY SENSOR RELAY/POWER PACK

POWER

POWER/DATA/TELEPHONE COMBINATION FLOOR BOX

RECEPTACLE CLOCK POWER (MTD 7FT AFF UON)

RECEPTACLE DUPLEX WALL EMERGENCY POWER

RECEPTACLE DUPLEX WALL W/GROUND FAULT CIRCUIT INTERRUPTER
SUBSCRIPT
WP = WEATHERPROOF W/WEATHER RESISTANT (WR) RECEPTACLE

RECEPTACLE SINGLE WALL
SUBSCRIPT NONE = SINGLE POLE SWITCH
S = SINGLE RECEPTACLE WITH SWITCH

RECEPTACLE DUPLEX WALL
SUBSCRIPT NONE = DUPLEX WALL
S = SWITCHED DUPLEX (TOP HALF TO BE SWITCHED)
WM = SURFACE MOUNTED WIRE MOLD RECEPTACLE
ITV = INSTRUCTIONAL TV OUTLET
TV = MOUNTED 6" O.C. AND BESIDE CABLE TV WALL OUTLET

RECEPTACLE SPECIAL WALL
SUBSCRIPT = NEMA CONFIGURATION

RECEPTACLE QUADRAPLEX WALL

MOTORIZED PROJECTION SCREEN

AUTOMATIC DOOR OPERATOR

RECEPTACLE DUPLEX FLOOR

RELAY

JUNCTION BOX RANGE HOOD. AND DIRECT CONNECTION

JUNCTION BOX GARBAGE DISPOSAL, AND DIRECT CONNECTION

JUNCTION BOX
SUBSCRIPT
F = JUNCTION BOX FOR CEILING FAN
A = AUDIO OUTLET-2 GANG, BLANK PLATE
M = MICRO PHONE BOX-1 GANG, BLANK PLATE
V = VIDEO OUTLET-1 GANG, BLANK PLATE
W = WALL MTD.

BRACKETS INDICATE COMMON BOX

POWER POLE
SUBSCRIPT
R = NUMBER OF DUPLEX RECEPTACLES
LETTER = SEE DATA/TELEPHONE SCHEDULE

UNDER FLOOR DUCT

DISCONNECT SWITCH – SIZE/#POLES/ENCLOSURE

FUSED DISCONNECT SWITCH – SIZE/# POLES/FUSE/ENCLOSURE

MAGNETIC MOTOR STARTER – # POLES/STARTER/ENCLOSURE

COMBINATION STARTER – SIZE/# POLES/FUSE/STARTER/ENCLOSURE

TRANSFORMER

UTILITY TRANSFORMER

PLYWOOD BACKBOARD (PAINTED WITH TWO COATS FIRE RETARDANT PAINT).

ELECTRICAL PANEL SURFACE MOUNTED
SUBSCRIPT
LA = PANEL DESIGNATION

ELECTRICAL PANEL FLUSH MOUNTED
SUBSCRIPT
LA = PANEL DESIGNATION

MAIN SWITCHBOARD

DISTRIBUTION PANEL

PUSHBUTTON
SUBSCRIPT:
HC = HANDICAP DOOR OPERATOR PUSHBUTTON
ST = FIREMANS BREAK LASS STATION FOR SHUNT-TRIP OPERATION
E = EMERGENCY POWER OFF PUSHBUTTON

CONTACTOR

TIME CONTROL SWITCH

PHOTOCELL

GENERATOR

METER

CIRCUIT BREAKER

GROUND BAR

GENERATOR REMOTE ALARM PANEL

SYSTEM

CEILING PROJECTION BOX IN CEILING. PROVIDE 2'X2' PROJECTOR MOUNTING PLATE WITH ONE OUTLET CONTAINING 1-SVGA CONNECTED TO FLOOR BOX. PROVIDE 1-DUPLEX RECEPTACLE IN MOUNTING PLATE. EQUAL TO CHIEF #CMS445.

CABLE TV WALL OUTLET

OUTLET TELEPHONE/DATA WALL, EMPTY CONDUIT W/PULL CORD AND BOX WITH BLANK COVER PLATE
SUBSCRIPT
LETTER = SEE DATA/ TELEPHONE SCHEDULE
W = WALL PHONE

OUTLET FLOOR TELEPHONE/DATA, EMPTY CONDUIT W/PULL CORD AND BOX WITH BLANK COVER PLATE

SOUND SYSTEM MICROPHONE FLOOR MOUNTED

SOUND SYSTEM MICROPHONE RECEPTACLE WALL MTD. 18"

SOUND SYSTEM AMPLIFIER

INTERCOM CALL-IN PUSH BUTTON WITH CALL BUTTON

INTERCOM ADMINISTRATIVE HANDSET

INTERCOM MASTER CONSOLE HANDSET

WIRELESS ACCESS POINT
SUBSCRIPT: LETTER SEE DATA/TELEPHONE SCHEDULE

MONITOR MASTER MTD. @ DESK

INTERCOM SYSTEM ANNUNCIATOR

SOUND SYSTEM HORN-SPEAKER WALL MOUNTED

SOUND SYSTEM SPEAKER WALL MOUNTED

SOUND SYSTEM SPEAKER CEILING MOUNTED

VOLUME CONTROL

GAS SOLENOID VALVE

MECHANICAL

MOTOR

EQUIPMENT TAG, SEE ELECTRICAL MECHANICAL SCHEDULE

HEATER, ELECTRIC RESISTANCE, SEE ELECTRICAL MECHANICAL SCHEDULE

FIRE ALARM

FIRE ALARM ANNUNCIATOR PANEL REMOTE

FIRE ALARM CONTROL PANEL

FIRE ALARM PULL STATION

FIRE ALARM SPEAKER
SUBSCRIPT
WP = WEATHERPROOF

FIRE ALARM SPEAKER / STROBE
SUBSCRIPT NONE = UL 1971, 15cd STROBE
A = UL 1971, 30cd STROBE
B = UL 1971, 75cd STROBE
C = UL 1971, 110cd STROBE

FIRE ALARM STROBE
SUBSCRIPT NONE = UL 1971, 15cd STROBE
A = UL 1971, 30cd STROBE
B = UL 1971, 75cd STROBE
C = UL 1971, 110cd STROBE

FIRE ALARM SMOKE DETECTOR
SUBSCRIPT A = FIRE ALARM SMOKE DETECTOR WITH AUXILIARY CONTACTS
D = FIRE ALARM SMOKE DETECTOR DUCT MOUNT

ALARM VOICE COMMUNICATION PANEL

NOTE:
FOR MOUNTING HEIGHTS REFER TO ELECTRICAL DEVICE ELEVATION DETAILS.

HASKELL ARCHITECTS and ENGINEERS, P.A.
NORTH CAROLINA – Architecture # 51202, Engineering # C-2136
HASKELL
The Haskell Company
111 Riverside Avenue
Jacksonville, Florida 32202
Phone # (904) 791-4500

MARINE CORPS AIR STATION CHERRY POINT

RECREATIONAL VEHICLE PARK

CHERRY POINT, NORTH CAROLINA

DATE	ISSUE/REVISION
06/11/12	FINAL_CD
06/04/12	CI
04/09/12	OPT.2_95%
08/29/11	RPI
07/01/11	PR

We hereby expressly reserve the property rights to this drawing and it is not to be reproduced, copied in any format or manner whatsoever without first obtaining our express written permission and consent.

DRAWN BY: DMC
CHECKED BY: JLW

AE JOB NUMBER
6601490

ELECTRICAL LEGEND

E-001
SHEET NUMBER

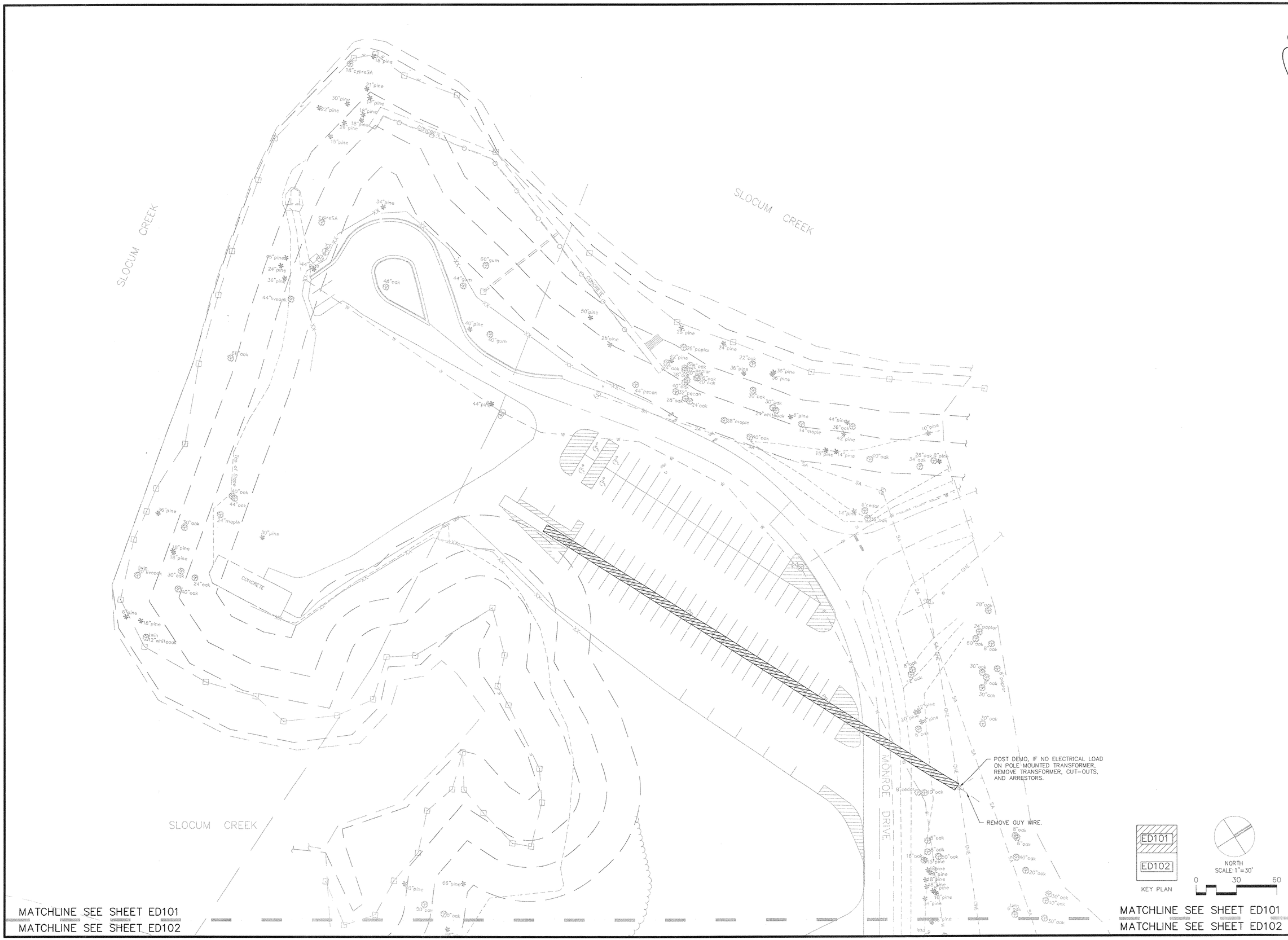

HASKELL ARCHITECTS and ENGINEERS, P.A.
NORTH CAROLINA – Architecture # 51202, Engineering # C-2136

HASKELL

The Haskell Company
111 Riverside Avenue
Jacksonville, Florida 32202
Phone # (904) 791-4500

MARINE CORPS AIR STATION CHERRY POINT

RECREATIONAL VEHICLE PARK

CHERRY POINT, NORTH CAROLINA

DATE	ISSUE/REVISION
06/11/12	FINAL_CD
06/04/12	CI
04/09/12	OPT.2_95%
08/29/11	RPI
07/01/11	PR

We hereby expressly reserve the property rights to this drawing and it is not to be reproduced, copied in any format or manner whatsoever without first obtaining our express written permission and consent.

DRAWN BY: DMC
CHECKED BY: JLW

AE JOB NUMBER
6601490

ELECTRICAL DEMOLITION SITE PLAN

ED101
SHEET NUMBER

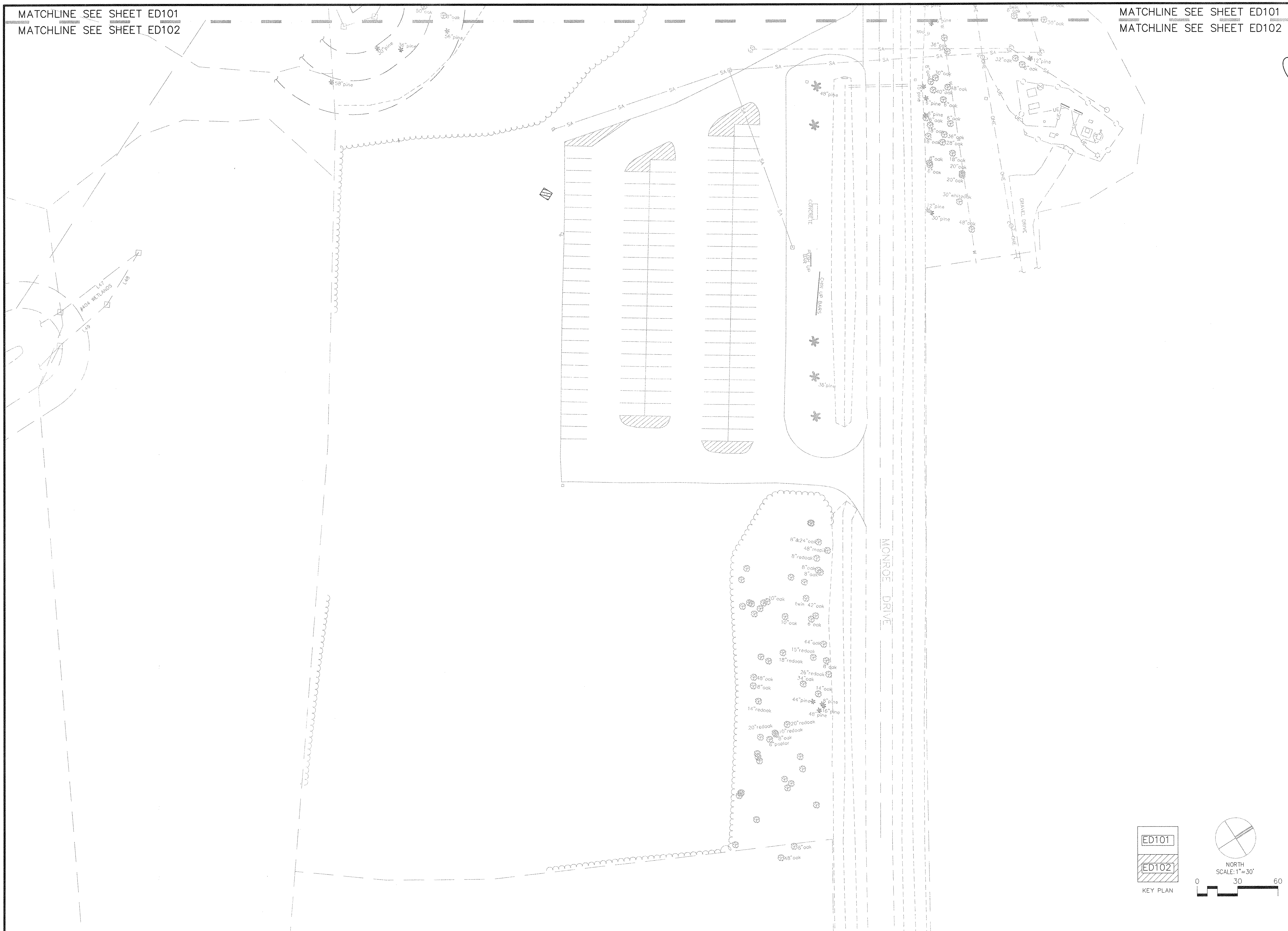

HASKELL ARCHITECTS and ENGINEERS, P.A.
NORTH CAROLINA – Architecture # 51202, Engineering # C-2136

HASKELL
The Haskell Company
111 Riverside Avenue
Jacksonville, Florida 32202
Phone # (904) 791-4500

MARINE CORPS AIR STATION CHERRY POINT

RECREATIONAL VEHICLE PARK

CHERRY POINT, NORTH CAROLINA

DATE	ISSUE/REVISION
06/11/12	FINAL_CD
06/04/12	CI
04/09/12	OPT.2_95%
08/29/11	RPI
07/01/11	PR

We hereby expressly reserve the property rights to this drawing and it is not to be reproduced, copied in any format or manner whatsoever without first obtaining our express written permission and consent.

DRAWN BY:	CHECKED BY:
DMC	JLW

AE JOB NUMBER
6601490

ELECTRICAL DEMOLITION SITE PLAN

ED102
SHEET NUMBER

MERLE L. HAWKINS, P.E.
NORTH CAROLINA PROFESSIONAL ENGINEER SEAL 031378 Merle LeRoy Hawkins
REG.
10 JUN 12

HASKELL ARCHITECTS and ENGINEERS, P.A.
NORTH CAROLINA – Architecture # 51202, Engineering # C-2136

HASKELL
The Haskell Company
111 Riverside Avenue
Jacksonville, Florida 32202
Phone # (904) 791-4500

MARINE CORPS AIR STATION CHERRY POINT

RECREATIONAL VEHICLE PARK

CHERRY POINT, NORTH CAROLINA

DATE	ISSUE/REVISION
06/11/12	FINAL_CD
06/04/12	CI
04/09/12	OPT.2_95%
08/29/11	RPI
07/01/11	PR

We hereby expressly reserve the property rights to this drawing and it is not to be reproduced, copied in any format or manner whatsoever without first obtaining our express written permission and consent.

DRAWN BY:	CHECKED BY:
DMC	JLW

AE JOB NUMBER
6601490

ELECTRICAL SITE PLAN

E-101
SHEET NUMBER

MATCHLINE SEE SHEET E-101
MATCHLINE SEE SHEET E-102

MATCHLINE SEE SHEET E-101
MATCHLINE SEE SHEET E-102

BATH HOUSE
STUB, CAP, AND MARK CONDUITS WITH 3/8" REBAR 10' LONG MARKER DRIVEN BELOW GRADE
SEE RISER DIAGRAM
PAD MOUNTED TRANSFORMER, BY OTHERS.
MDP-7, VIA LIGHTING CONTACTOR
ELECTRICAL HANDHOLE
CHECK-IN OFFICE
LB-6, VIA LIGHTING CONTACTOR
GROUND SIGN
RV SERVICE PEDESTAL (TYP.) SEE SHEET E-503, DETAIL B3
TELECOM HANDHOLE PROVIDED BY OTHERS
2-SCH. 40-4" DUCT
UNPAVED ROAD
EXISTING TEL. PED.
TELEPHONE AND CATV SERVICE, SEE E-601
MATCH LINE
#404 WETLANDS

E-101
E-102
KEY PLAN

NORTH
SCALE: 1"=30'
0 30 60

HASKELL ARCHITECTS and ENGINEERS, P.A.
NORTH CAROLINA – Architecture # 51202, Engineering # C-2136

HASKELL
The Haskell Company
111 Riverside Avenue
Jacksonville, Florida 32202
Phone # (904) 791-4500

MARINE CORPS AIR STATION CHERRY POINT
RECREATIONAL VEHICLE PARK
CHERRY POINT, NORTH CAROLINA

DATE	ISSUE/REVISION
06/11/12	FINAL_CD
06/04/12	CI
04/09/12	OPT.2_95%
08/29/11	RPI
07/01/11	PR

We hereby expressly reserve the property rights to this drawing and it is not to be reproduced, copied in any format or manner whatsoever without first obtaining our express written permission and consent.

DRAWN BY: DMC
CHECKED BY: JLW
AE JOB NUMBER 6601490

ELECTRICAL SITE PLAN

E-102
SHEET NUMBER

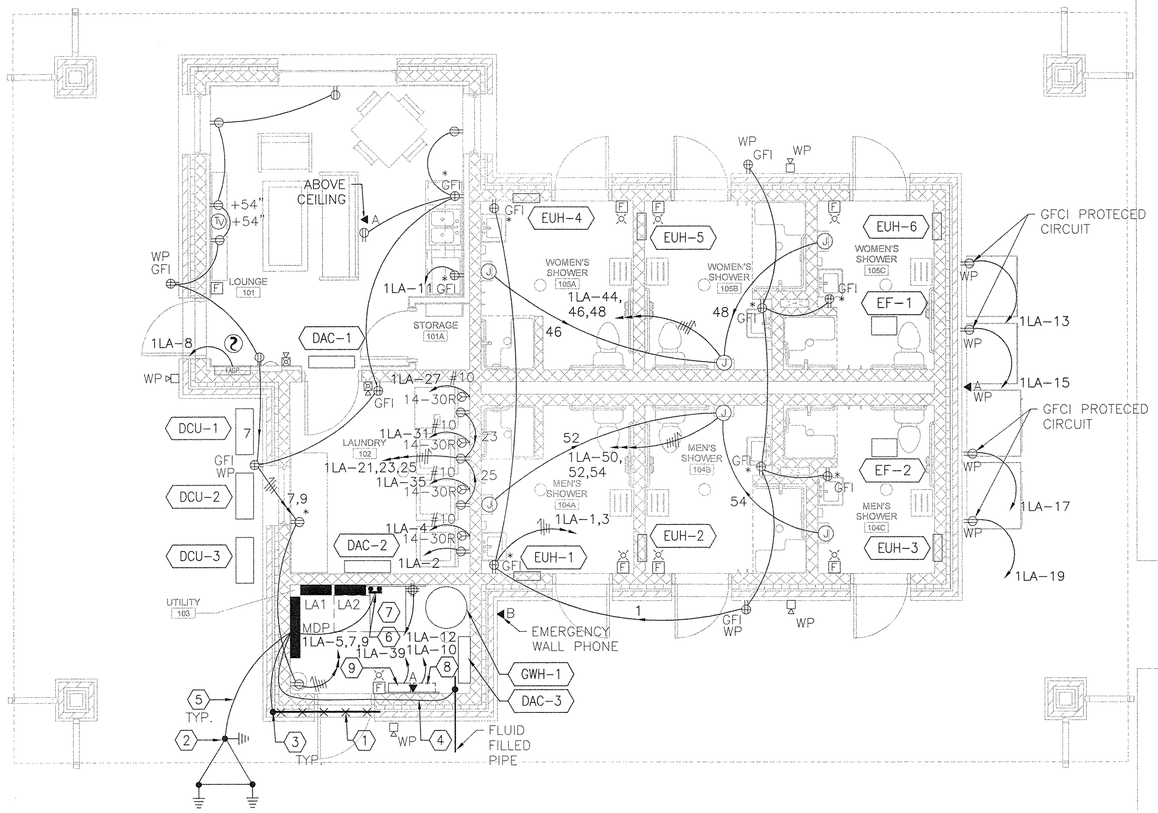

1 BATHHOUSE POWER & SYSTEMS PLAN

Scale: 1/4" = 1'-0"

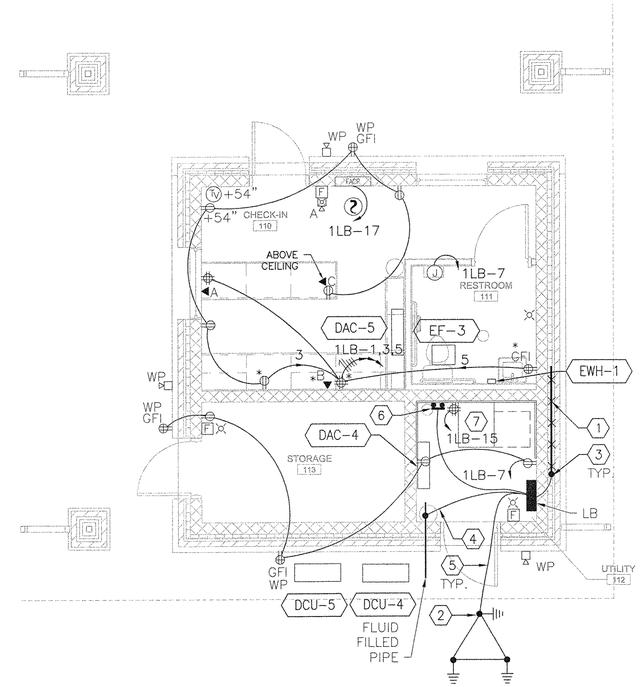

2 CHECK-IN OFFICE POWER & SYSTEMS PLAN

Scale: 1/4" = 1'-0"

REFERENCE NOTES:

1. UFER, #3/0, 20 FEET LONG IN BOTTOM 1/3 OF FOUNDATION EXORTHERMICALLY WELDED TO REBAR AT EACH "X". SEE E501 DETAIL A4.
2. #6 CU AND 3/4" x 10' GROUND RODS WITH 10'-0" SEPARATION BETWEEN EACH.
3. EXOTHERICALLY WELDED CONNECTION.
4. #3/0 BARE CU BONDED TO EVERY FLUID FILLED PIPE ENTERING/EXITING BUILDING.
5. #3/0 CU.
6. 1/4"X4"X18" GROUND BAR CONNECTED TO SERVICE ENTRANCE GROUND BUS VIA #6 CU GREEN CONDUCTOR.
7. WALL MOUNT COMMUNICATIONS CABINET. 24" HIGH, 24" WIDE, AND 30" DEEP.
8. FUTURE MASS NOTIFICATION PANEL LOCATION. PROVIDE 3/4" CONDUIT WITH WEATHER HEAD 6 FOOT ABOVE ROOF FOR MASS NOTIFICATION ANTENNA. COORDINATE EXACT LOCATION WITH FIRE DEPARTMENT.
9. BOSCH FA TRANSMITTER.

0 2' 4' 8'

SCALE: 1/4" = 1'-0"

HASKELL ARCHITECTS and ENGINEERS, P.A.
NORTH CAROLINA – Architecture # 51202, Engineering # C-2136
HASKELL
The Haskell Company
111 Riverside Avenue
Jacksonville, Florida 32202
Phone # (904) 791-4500

MARINE CORPS AIR STATION CHERRY POINT

RECREATIONAL VEHICLE PARK

CHERRY POINT, NORTH CAROLINA

DATE	ISSUE/REVISION
06/11/12	FINAL_CD
06/04/12	CI
04/09/12	OPT.2_95%
08/29/11	RPI
07/01/11	PR

We hereby expressly reserve the property rights to this drawing and it is not to be reproduced, copied in any format or manner whatsoever without first obtaining our express written permission and consent.

DRAWN BY: DMC
CHECKED BY: JLW

AE JOB NUMBER 6601490

ELECTRICAL POWER & SYSTEMS PLAN

EP101

SHEET NUMBER

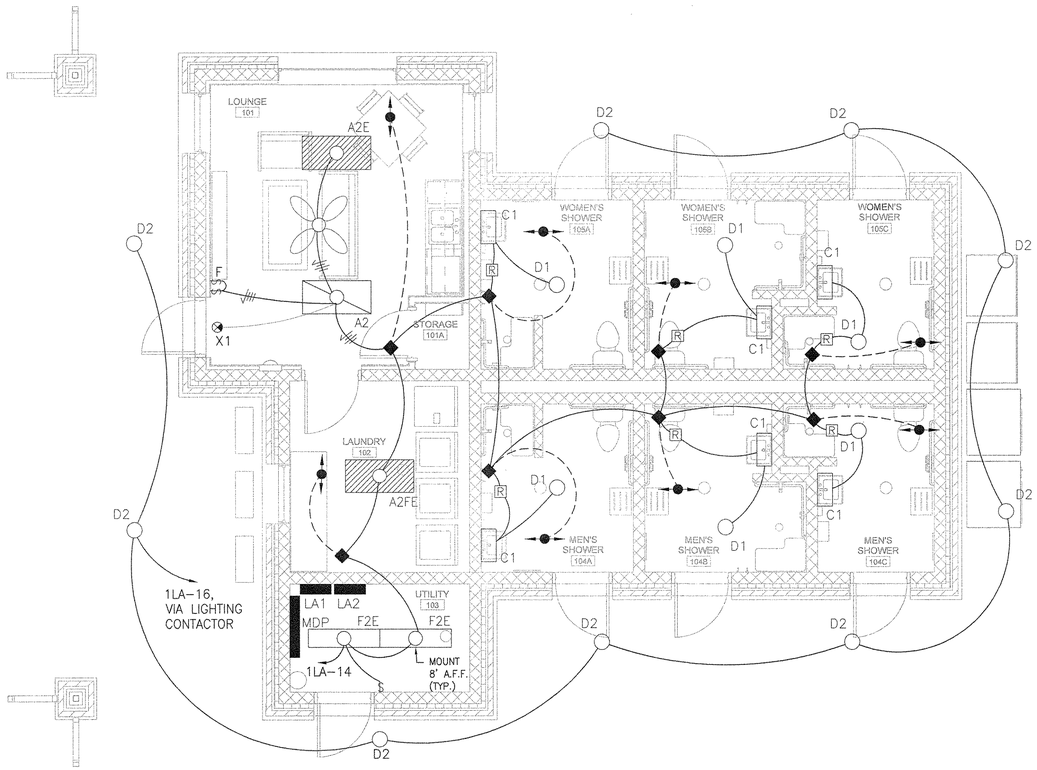

1 BATHHOUSE LIGHTING PLAN
Scale: 1/4" = 1'-0"

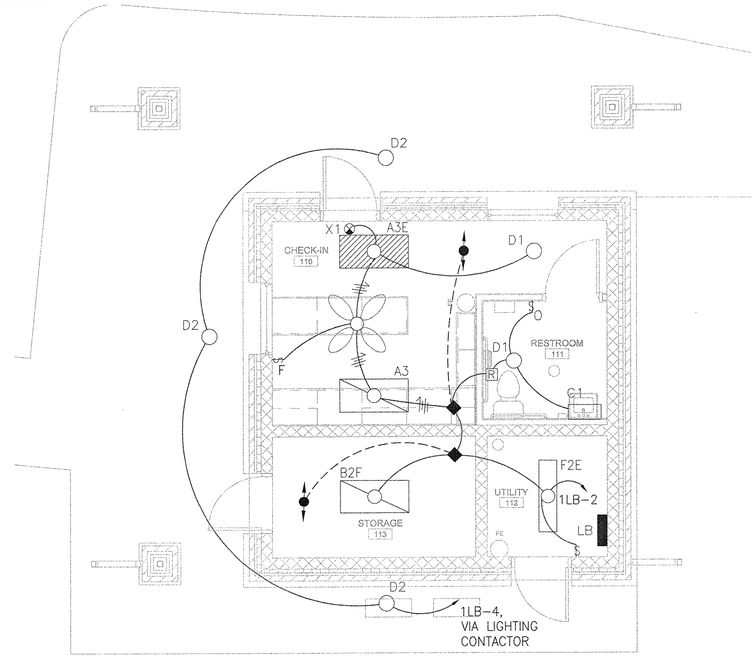

2 CHECK-IN OFFICE LIGHTING PLAN
Scale: 1/4" = 1'-0"

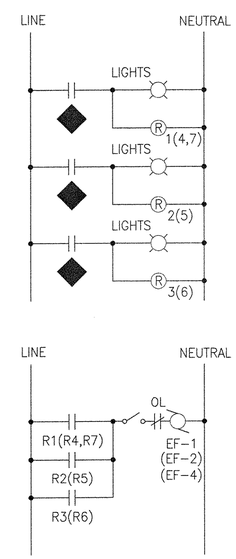

3 LADDER DIAGRAM EF CONTROLS
Scale: N.T.S.

0 2' 4' 8'
SCALE: 1/4" = 1'-0"

HASKELL ARCHITECTS and ENGINEERS, P.A.
NORTH CAROLINA – Architecture # 51202, Engineering # C-2136
HASKELL
The Haskell Company
111 Riverside Avenue
Jacksonville, Florida 32202
Phone # (904) 791-4500

MARINE CORPS AIR STATION CHERRY POINT

RECREATIONAL VEHICLE PARK

CHERRY POINT, NORTH CAROLINA

DATE	ISSUE/REVISION
06/11/12	FINAL_CD
06/04/12	CI
04/09/12	OPT.2_95%
08/29/11	RPI
07/01/11	PR

We hereby expressly reserve the property rights to this drawing and it is not to be reproduced, copied in any format or manner whatsoever without first obtaining our express written permission and consent.

DRAWN BY: DMC
CHECKED BY: JLW

AE JOB NUMBER
6601490

ELECTRICAL LIGHTING PLAN

EL101
SHEET NUMBER

CONTACTOR SCHEDULE			
CONTACTOR	SIZE POLES	SIZE AMPS	CIRCUITS
1	6	20	MDP-7, 1LA-16
2	4	20	1LB-4, 6

NOTE: PHOTO CELL MOUNTED ABOVE ROOF LEVEL FACING NORTH UNO.

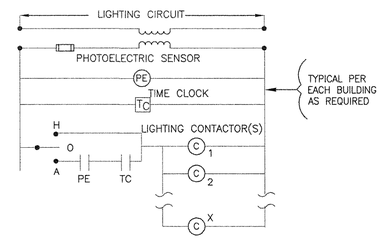

260923_04 HASKELL

LUMINAIRE CONTROLS EXTERIOR LIGHTING

SCALE: N.T.S.

C2

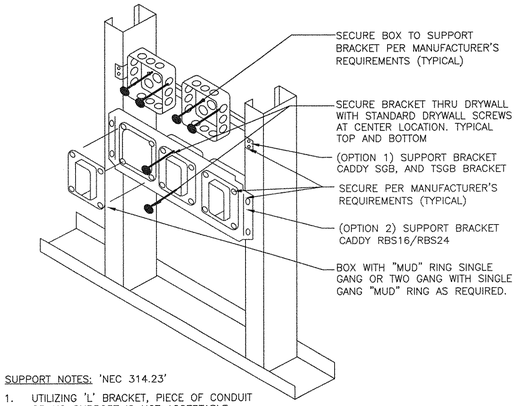

SUPPORT NOTES: 'NEC 314.23'

1. UTILIZING 'L' BRACKET, PIECE OF CONDUIT OR NO SUPPORT IS NOT ACCEPTABLE.

260726_02 HASKELL

OUTLET BOX MOUNTING GWB SUPPORT BRACKET

SCALE: N.T.S.

C3

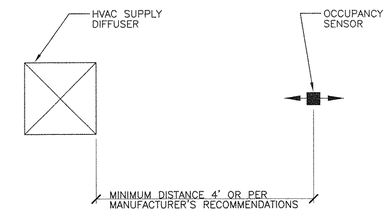

260923_01 HASKELL

OCCUPANCY SENSOR AND DIFFUSER DETAIL

SCALE: N.T.S.

C4

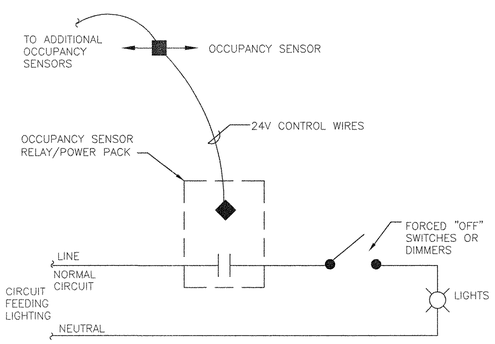

NOTE:
1. DO NOT EXCEED OUTPUT RATING OF POWER PACK.

260923_06 HASKELL

OCCUPANCY SENSOR (N) NORMAL CIRCUIT DETAIL

SCALE: N.T.S.

B2

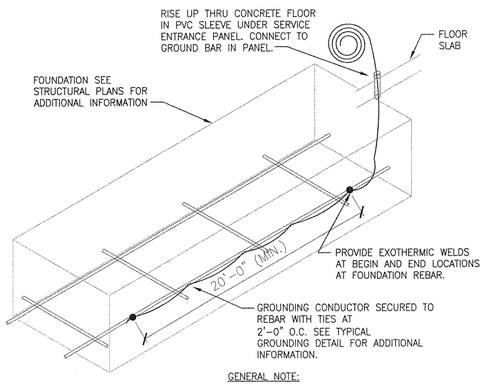

GENERAL NOTE:

1. ELECTRICAL CONTRACTOR TO INSTALL ENOUGH CABLE TO CONNECT TO GROUND BAR IN SERVICE ENTRANCE PANEL.

260526_06 HASKELL

UFER GROUNDING DETAIL

SCALE:N.T.S.

B3

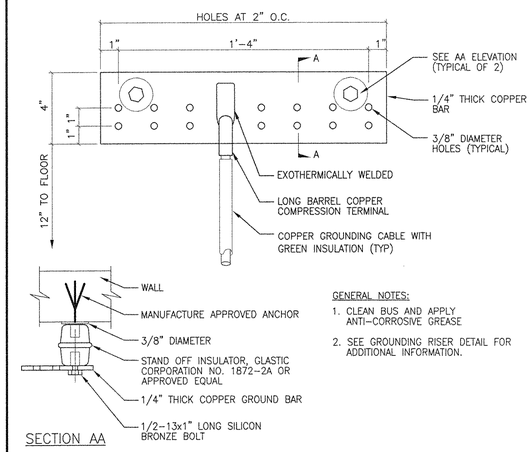

GENERAL NOTES:

1. CLEAN BUS AND APPLY ANTI-CORROSIVE GREASE
2. SEE GROUNDING RISER DETAIL FOR ADDITIONAL INFORMATION.

260526_06 HASKELL

GROUND BUS DETAIL

SCALE: N.T.S.

B4

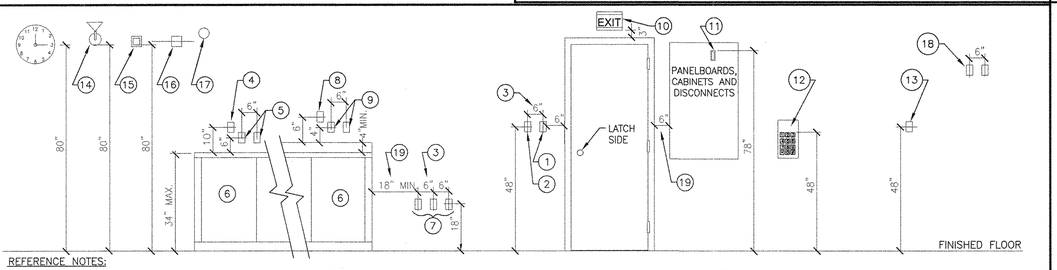

REFERENCE NOTES:

1. 1 OR MULTI-GANG LIGHT SWITCH(ES).
2. ALL FIRE ALARM PULL STATION, DIMMERS, THERMOSTAT, ETC.
3. 6" O.C. BETWEEN CENTER LINES OF NEAREST GANGS
4. WALL MOUNTED PHONE (ONLY) OVER CABINETS, COUNTERS, ETC. W/O BACKSPLASHES
5. POWER AND/OR DATA OUTLETS 6" ABOVE COUNTER FOR COUNTERS W/O BACKSPLASHES
6. CABINETS, COUNTERS
7. MULTIPLE TYPES OF DEVICES IN COMMON LOCATION
8. WALL MOUNTED PHONE (ONLY) OVER CABINETS, COUNTERS, ETC. WITH BACKSPLASH
9. POWER AND/OR DATA OUTLETS 4" ABOVE COUNTER WITH BACKSPLASH.
10. CENTERED ON DOOR, TYPICAL LOCATION FOR WALL MOUNT EXIT SIGNS, NURSE CALL DOME LIGHTS, ETC.
11. HIGHEST POINT OF DISCONNECT DEVICE HANDLE IN UP POSITION
12. BUTTONS OR HIGHEST OPERABLE POINT ON PAY PHONE
13. WALL PHONE; CODE BLUE STATION, STAFF STATION, AND DUTY STATION
14. WALL MOUNT DEVICE WHEN DEPTH IS 4" OR GREATER, MINIMUM HEIGHT TO BOTTOM OF LOWEST PART (UNLESS NOTED OTHERWISE)
15. FIRE ALARM STROBE DEVICES, AND STROBES, DIMENSION TO BOTTOM OF DEVICE.
16. FIRE ALARM WALL MOUNTED ANNUNCIATION DEVICES SHALL BE THE SAME ELEVATIONS AS REFERENCE NOTE 15
17. VERTICAL MOUNTED SMOKE DETECTORS 4" MINIMUM AND 12" MAXIMUM FROM TOP OF DETECTOR TO CEILING
18. TV POWER AND CATV DEVICES, COORDINATE LOCATION AND MOUNTING BRACKET WITH ARCH./INTERIOR DESIGNER FOR EXACT LOCATION
19. MINIMUM DISTANCE FROM VERTICAL CORNER OF WALL, OR PERMANENT OBJECT TO DEVICE OR CABINET

260000_02 HASKELL

ELECTRICAL DEVICE ELEVATIONS (ABA) TYPICAL VERTICAL SURFACE (UNLESS NOTED OTHERWISE)

SCALE: N.T.S.

A2

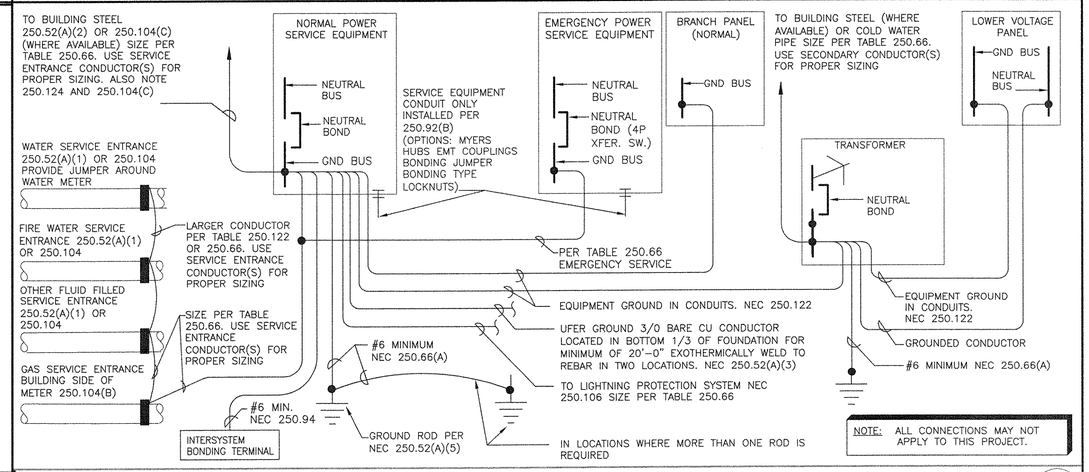

260526_01 HASKELL

GROUNDING RISER TYPICAL DETAIL

REFERENCE NEC 250

SCALE: N.T.S.

A4

HASKELL ARCHITECTS and ENGINEERS, P.A.
NORTH CAROLINA – Architecture # 51202, Engineering # C-2136
HASKELL
The Haskell Company
111 Riverside Avenue
Jacksonville, Florida 32202
Phone # (904) 791-4500

MARINE CORPS AIR STATION CHERRY POINT

RECREATIONAL VEHICLE PARK

CHERRY POINT, NORTH CAROLINA

DATE	ISSUE/REVISION
06/11/12	FINAL_CD
06/04/12	CI
04/09/12	OPT.2_95%
08/29/11	RPI
07/01/11	PR

We hereby expressly reserve the property rights to this drawing and it is not to be reproduced, copied in any format or manner whatsoever without first obtaining our express written permission and consent.

DRAWN BY: DMC
CHECKED BY: JLW

AE JOB NUMBER 6601490

ELECTRICAL DETAILS

E-501

SHEET NUMBER

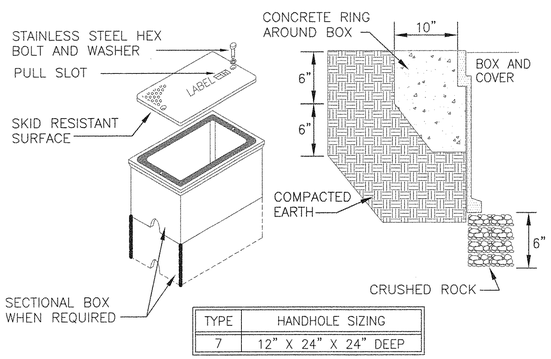

TYPE	HANDHOLE SIZING
7	12" X 24" X 24" DEEP

HANDHOLE REQUIREMENTS

1. HOUSING SHALL BE A POLYMER CONCRETE REINFORCED WITH A HEAVY WEAVE FIBERGLASS REINFORCING WITH COMPRESSIVE STRENGTH OF NO LESS THAN 10,000 PSI.
2. COVER AND BOX SHALL WITHSTAND A SERVICE LOAD OF NO LESS THAN 15,000 LBS OVER A 10" x 10" AREA.
3. PROVIDE STAINLESS STEEL BOLTS AND INSERTS.
4. PROVIDE WITH (2) 2 1/2" MOUSEHOLES.
5. PROVIDE LABEL "ELECTRICAL" FOR POWER HANDHOLES OR "TELEPHONE" FOR TELEPHONE HANDHOLES, OR AS INDICATED.

26052_01 HASKELL

STANDARD HANDHOLE (COMPOSITE) TYPE 7 DETAIL

SCALE: N.T.S.

B2

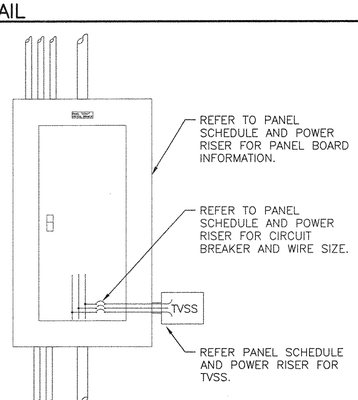

NOTE:
CLOSE NIPPLED TVSS TO PANEL ENCLOSURE AND CONNECT TO NEAREST CIRCUIT BREAKER IN PANEL TO MINIMIZE LENGTH OF TVSS CONDUCTORS. (NOT EXCEED 1'-6") AND AVOID BENDS.

26431_01 HASKELL

TVSS TO PANELBOARD MOUNTING DETAIL

SCALE: N.T.S.

A1

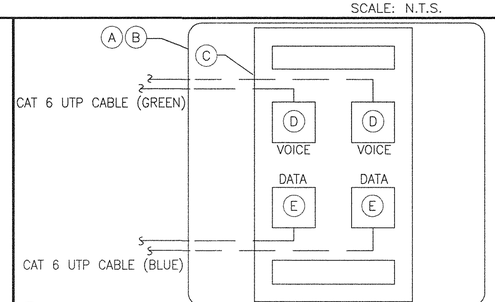

(A) ELECTRICAL BOX, RECTANGULAR STAMPED STEEL, 2-GANG, 2-1/8" MINIMUM DEPTH. HUBBELL PART #B2482 OR EQUAL.

(B) SINGLE GANG REDUCER RING/ADAPTER.

(C) FACEPLATE, SINGLE-GANG, 4 PORT. REARLOADING HUBBELL PART #IFP I 4TI OR EQUAL.

(D) VOICE JACK, CAT 6 (GREEN) HUBBELL PART #HXJ6B OR EQUAL.

(E) DATA JACK, CAT 6 (BLUE) HUBBELL PART #HXJ6GN OR EQUAL.

THC/ELEC

TELECOMUNICATIONS WALL OUTLET DETAIL

SCALE: N.T.S.

A2

RACK A

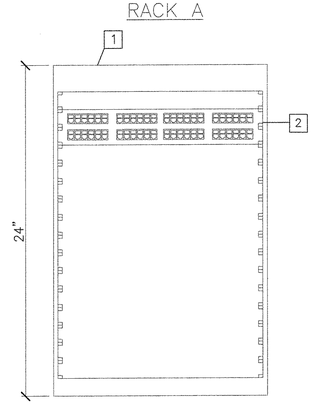

COMMUNICATIONS RACK ELEVATION

KEY NOTES

1. STANDARD 24" HIGH x 24" WIDE ALUMINUM WALL MOUNTED LOCKABLE CABINET WITH UNIVERSAL 5/8", 5/8", 1/2" ALTERNATING HOLE PATTERN FRONT AND BACK, BLACK BAKED ENAMEL FINISH.
2. 48 PORT PATCH PANEL FOR CONNECTION TO 110 BLOCKS AND DATA PORTS. SEE TELE/DATA RISER DIAGRAM. CONNECT ONE PAIR OF THE 25 PAIR CABLE TO THE CENTER TWO PINS OF 24 PORTS, REMAINING 24 PORTS TO BE USED FOR DATA PORTS.

FINISHED FLOOR

COMMUNICATION RACK

SCALE: N.T.S.

A3

NOT FOR CONSTRUCTION

HASKELL ARCHITECTS and ENGINEERS, P.A.
NORTH CAROLINA – Architecture # 51202, Engineering # C-2136
HASKELL
The Haskell Company
111 Riverside Avenue
Jacksonville, Florida 32202
Phone # (904) 791-4500

MARINE CORPS AIR STATION CHERRY POINT

RECREATIONAL VEHICLE PARK

CHERRY POINT, NORTH CAROLINA

DATE	ISSUE/REVISION
06/11/12	FINAL_CD
06/04/12	CI
04/09/12	OPT.2_95%
08/29/11	RPI
07/01/11	PR

We hereby expressly reserve the property rights to this drawing and it is not to be reproduced, copied in any format or manner whatsoever without first obtaining our express written permission and consent.

DRAWN BY: DMC
CHECKED BY: JLW

AE JOB NUMBER
6601490

ELECTRICAL DETAILS

E-502
SHEET NUMBER

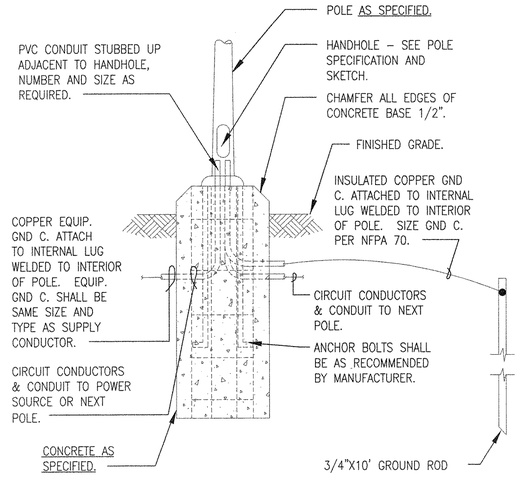

LEGEND

GND C. – GROUNDING CONDUCTOR

SEE NOTE 2 ON DETAIL XL-19.

BOLT-DOWN POLE FOUNDATIONS (B1)

STYLE XL-26

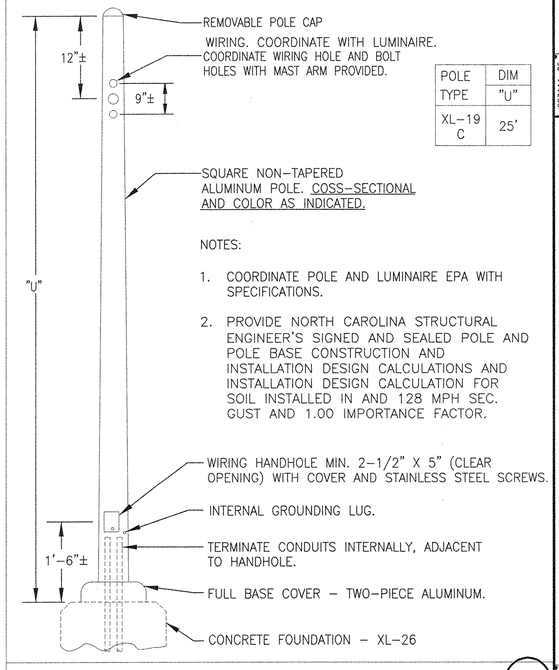

POLE TYPE	DIM "U"
XL-19 C	25'

NOTES:

1. COORDINATE POLE AND LUMINAIRE EPA WITH SPECIFICATIONS.
2. PROVIDE NORTH CAROLINA STRUCTURAL ENGINEER'S SIGNED AND SEALED POLE AND POLE BASE CONSTRUCTION AND INSTALLATION DESIGN CALCULATIONS AND INSTALLATION DESIGN CALCULATION FOR SOIL INSTALLED IN AND 128 MPH SEC. GUST AND 1.00 IMPORTANCE FACTOR.

ALUMINUM POLE – ANCHOR-BASE, TENON MOUNT (A1)

STYLE XL-19

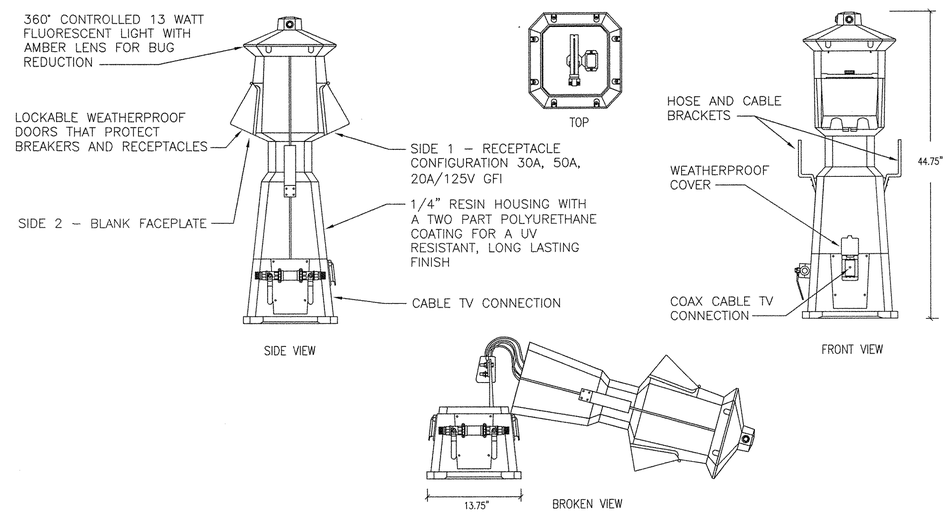

283111_05 HASKELL

RV POWERHOUSE SERVICE PEDESTAL DETAIL (B3)

SCALE: N.T.S.

FIRE ALARM PANEL NOTES

1. SEE DRAWINGS FOR EXACT DEVICE LOCATIONS.
2. PULL STATIONS, SMOKE DETECTORS AND HEAT DETECTORS TO BE SUPERVISED.
3. ALL INDIVIDUAL INITIATING DEVICES SHALL BE ADDRESSABLE AND POINT ANNUNCIATED.
4. PER NFPA 72 AND ALL OTHER APPLICABLE CODES.
5. FACP SHALL BE FIELD PROGRAMMABLE. ALL RIGHTS TO SOFTWARE SHALL BE GIVEN TO OWNER.
6. PROVIDE AUTO-DIALER, TRANSMITTER OR OTHER DEVICES NEEDED TO TRANSMIT ALARM CONDITION TO OWNER MONITORING SERVICE.
7. FIRE ALARM SYSTEM SHOP DRAWINGS TO BE APPROVED BY LOCAL AUTHORITY HAVING JURISDICTION, PRIOR TO SUBMITTION TO A/E.

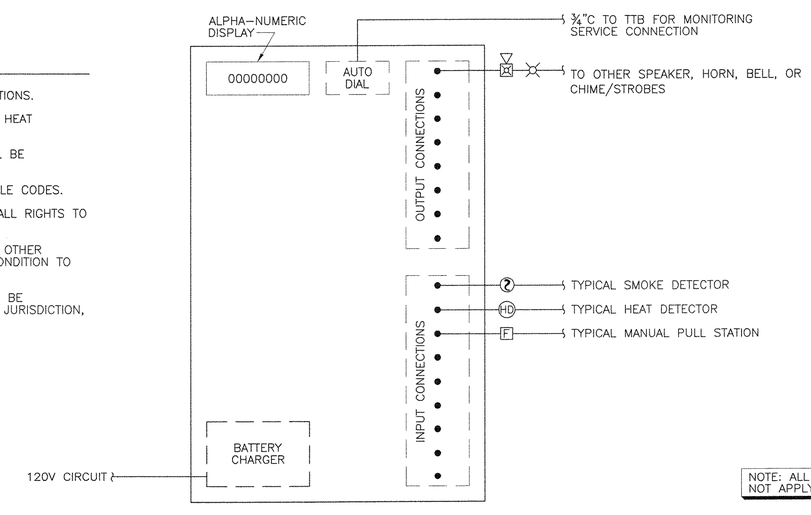

NOTE: ALL DEVICES MAY NOT APPLY TO THIS JOB

283111_05 HASKELL

FIRE ALARM PANEL RISER DETAIL (A3)

SCALE: N.T.S.

HASKELL ARCHITECTS and ENGINEERS, P.A.
NORTH CAROLINA – Architecture # 51202, Engineering # C-2136
HASKELL
The Haskell Company
111 Riverside Avenue
Jacksonville, Florida 32202
Phone # (904) 791-4500

MARINE CORPS AIR STATION CHERRY POINT

RECREATIONAL VEHICLE PARK

CHERRY POINT, NORTH CAROLINA

DATE	ISSUE/REVISION
06/11/12	FINAL_CD
06/04/12	CI
04/09/12	OPT.2_95%
08/29/11	RPI
07/01/11	PR

We hereby expressly reserve the property rights to this drawing and it is not to be reproduced, copied in any format or manner whatsoever without first obtaining our express written permission and consent.

DRAWN BY: DMC CHECKED BY: JLW

AE JOB NUMBER 6601490

ELECTRICAL DETAILS

E-503

SHEET NUMBER

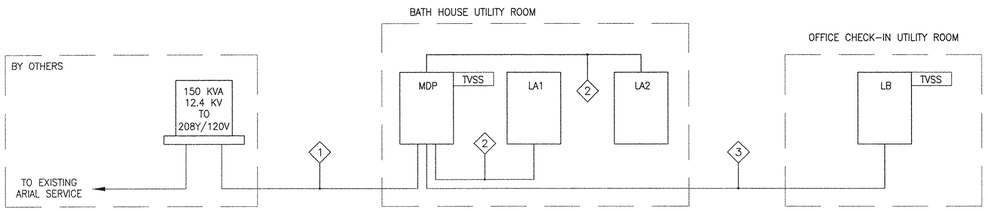

1 POWER RISER DIAGRAM

FEEDER SCHEDULE:

1. 4 SETS OF 3-350 KCMIL, #1 GND, EACH IN 4" C. CONNECT TO TRANSFORMER.
2. 4 #4/0, #4 GND, 2 1/2" C.
3. 4 #2/0, #6 GND, 2" C.

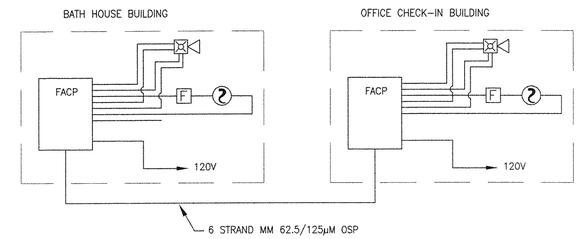

2 FIRE ALARM RISER DIAGRAM

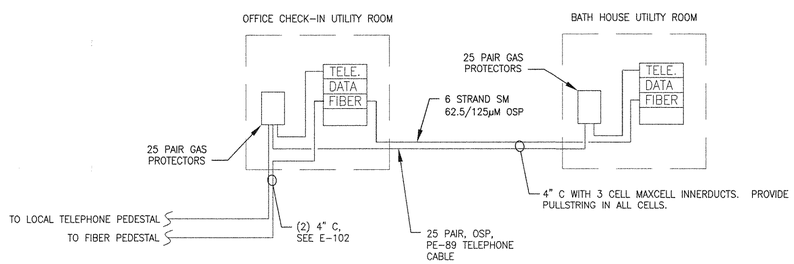

3 TELECOM RISER DIAGRAM

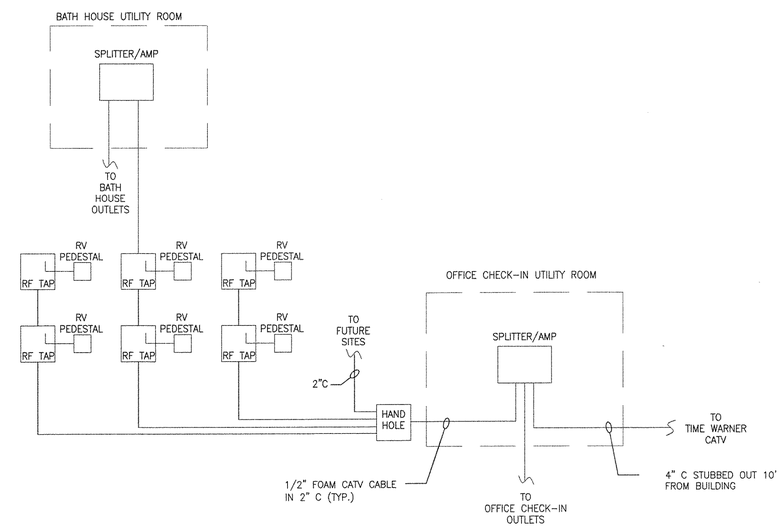

4 CCTV RISER DIAGRAM

HASKELL ARCHITECTS and ENGINEERS, P.A.
NORTH CAROLINA – Architecture # 51202, Engineering # C-2136
HASKELL
The Haskell Company
111 Riverside Avenue
Jacksonville, Florida 32202
Phone # (904) 791-4500

MARINE CORPS AIR STATION CHERRY POINT

RECREATIONAL VEHICLE PARK

CHERRY POINT, NORTH CAROLINA

DATE	ISSUE/REVISION
06/11/12	FINAL_CD
06/04/12	CI
04/09/12	OPT.2_95%
08/29/11	RPI
07/01/11	PR

We hereby expressly reserve the property rights to this drawing and it is not to be reproduced, copied in any format or manner whatsoever without first obtaining our express written permission and consent.

DRAWN BY: DMC
CHECKED BY: JLW

AE JOB NUMBER
6601490

ELECTRICAL RISER DIAGRAMS

E-601
SHEET NUMBER

DISTRIBUTION PANEL MDP SCHEDULE

1200 A BUS W/ 1200A MAIN CIR BKR, 208Y/120 VOLT, 3 PHASE, 4 WIRE, 22 KAIC MINIMUM, SURFACE MOUNT

CIRCUIT NO.	CIRCUIT FRAME	CIRCUIT TRIP / P	LOAD SERVED	AMPS ØA	AMPS ØB	AMPS ØC	FEEDER SIZE
1	225	150 / 3	PANELBOARD RV SITE FEEDER 1	160.0			SEE SITE PLAN
					160.0		
						160.0	
2	225	150 / 3	PANELBOARD RV SITE FEEDER 2	200.0			SEE SITE PLAN
					200.0		
						160.0	
3	225	200 / 3	PANELBOARD RV SITE FEEDER 3	280.0			SEE SITE PLAN
					280.0		
						240.0	
4	225	130 / 3	SPARE				
5	225	130 / 3	SPARE				
6	225	175 / 3	PANELBOARD RV SITE FEEDER 6	240.0			SEE SITE PLAN
					200.0		
						200.0	
7	30	20 / 3	SITE LIGHTING	5.5			SEE SITE PLAN
					5.5		
						5.5	
8	400	225 / 3	PANELBOARD LA1	92.3			SEE ELECTRICAL RISER
					87.1		
						88.7	
9	400	225 / 3	PANELBOARD LA2	96.4			SEE ELECTRICAL RISER
					101.4		
						101.4	
10	100	100 / 3	PANELBOARD LB	48.7			SEE ELECTRICAL RISER
					65.1		
						43.1	
11			FUTURE RV SITES	266.7			
					266.7		
						266.7	
12	100	100 / 3	SPARE				
13	100	100 / 3	SPARE				
14			SPACE				
			TOTAL	1389.6	1365.7	1265.4	

TOTAL CONNECTED AMPS: 1389.6 ØA 1365.7 ØB 1265.4 ØC TOTAL CODE LOAD: 298.7 KVA 829.2 AMPS

NOTES
PROVIDE SERVICE ENTRANCE LABEL.
MAIN CIRCUIT BREAKER SHALL BE 100% RATED.
-
-
-
-

PANELBOARD LA1 SCHEDULE

225 A BUS W/ MAIN LUGS ONLY, 208Y/120 VOLT, 3 PHASE, 4 WIRE, 22 KAIC MINIMUM, SURFACE MOUNT

LOAD SERVED	LOAD (AMPS) ØA	LOAD (AMPS) ØB	LOAD (AMPS) ØC	BREAKER TRIP / P	WIRE SIZE	CKT NO	PHASE A B C	CKT NO	WIRE SIZE	BREAKER TRIP / P	LOAD (AMPS) ØA	LOAD (AMPS) ØB	LOAD (AMPS) ØC	LOAD SERVED
RECEPTACLES	9.0			20 / 1	#12	1		2	#12	20 / 1	10.0			WASHER
RECEPTACLES		3.0		20 / 1	#12	3		4	#10	30 / 2		10.0		DRYER
RECEPTACLES			3.0	20 / 1	#12	5		6						
RECEPTACLES	9.0			20 / 1	#12	7		8	#12	20 / 1	6.0			FACP <1>
RECEPTACLES		7.5		20 / 1	#12	9		10	#12	20 / 1		6.0		FUTURE MASS NOTIFICATION PNL
MICROWAVE			10.0	20 / 1	#12	11		12	#12	20 / 1			10.0	COMM. CABINET
VENDING MACHINE	10.0			20 / 1	#12	13		14	#12	20 / 1	8.3			BATH HOUSE LIGHTING
VENDING MACHINE		10.0		20 / 1	#12	15		16	#12	20 / 1		14.6		EXTERIOR LIGHTING
VENDING MACHINE			10.0	20 / 1	#12	17		18					25.7	FUTURE LOAD
VENDING MACHINE	10.0			20 / 1	#12	19		20		20 / 1				SPARE
WASHER		10.0		20 / 3	#12	21		22		20 / 1				SPARE
WASHER			10.0		#12	23		24		20 / 1				SPARE
WASHER	10.0				#12	25		26		20 / 1				SPARE
DRYER		10.0		30 / 2	#10	27		28		20 / 1				SPARE
			10.0			29		30		20 / 1				SPARE
DRYER	10.0			30 / 2	#10	31		32		20 / 1				SPARE
		10.0				33		34						PREPARED SPACE
DRYER			10.0	30 / 2	#10	35		36						PREPARED SPACE
	10.0					37		38						PREPARED SPACE
BOSCH FA TRANSMITTER		6.0		20 / 1	#12	39		40						PREPARED SPACE
						41		42						PREPARED SPACE
TOTAL	68.0	56.5	53.0								24.3	30.6	35.7	TOTAL

TOTAL CONNECTED AMPS: 92.3 ØA 87.1 ØB 88.7 ØC TOTAL CODE LOAD: 33.4 KVA 92.6 AMPS

NOTES
<1> PROVIDE A MECHANICAL LOCK-ON DEVICE WITH A RED EXPOSED FINISH AND A LABEL ON THE METAL PANEL BOARD ADJACENT TO ANY BREAKER THAT SUPPLIES ELECTRICAL POWER TO THE FIRE ALARM PANEL(S). ALSO PROVIDE THE PANEL NUMBER AND CIRCUIT BREAKER NUMBER ON THE FIRE ALARM PANEL.
-
-
-

PANELBOARD LA2 SCHEDULE

225 A BUS W/ MAIN LUGS ONLY, 208Y/120 VOLT, 3 PHASE, 4 WIRE, 22 KAIC MINIMUM, SURFACE MOUNT

LOAD SERVED	LOAD (AMPS) ØA	LOAD (AMPS) ØB	LOAD (AMPS) ØC	BREAKER TRIP / P	WIRE SIZE	CKT NO	PHASE A B C	CKT NO	WIRE SIZE	BREAKER TRIP / P	LOAD (AMPS) ØA	LOAD (AMPS) ØB	LOAD (AMPS) ØC	LOAD SERVED
DCU-1	10.6			15 / 2	#12	1		2	#12	20 / 3	13.0			HAND DRYER
		10.6				3		4				16.0		HAND DRYER
DCU-2			12.0	15 / 2	#12	5		6					16.0	HAND DRYER
	12.0					7		8	#12	20 / 3	16.0			HAND DRYER
EF-1, 2		3.4		15 / 1	#12	9		10				16.0		HAND DRYER
EUH-1			11.2	15 / 2	#12	11		12					16.0	HAND DRYER
	11.2					13		14						
EUH-2		11.2		15 / 2	#12	15		16						
			11.2			17		18						
EUH-3	11.2			15 / 2	#12	19		20						
		11.2				21		22						
GWH-1			2.0	15 / 1	#12	23		24		20 / 1				SPARE
						25		26		20 / 1				SPARE
EUH-4		11.2		15 / 2	#12	27		28		20 / 1				SPARE
			11.2			29		30		20 / 1				SPARE
EUH-5	11.2			15 / 2	#12	31		32		20 / 1				SPARE
		11.2				33		34						PREPARED SPACE
EUH-6			11.2	15 / 2	#12	35		36						PREPARED SPACE
	11.2					37		38						PREPARED SPACE
DCU-3		10.6		15 / 2	#12	39		40						PREPARED SPACE
			10.6			41		42						PREPARED SPACE
TOTAL	67.4	69.4	69.4								29.0	32.0	32.0	TOTAL

TOTAL CONNECTED AMPS: 96.4 ØA 101.4 ØB 101.4 ØC TOTAL CODE LOAD: 35.9 KVA 99.6 AMPS

NOTES
-
-
-
-
-
-

HASKELL ARCHITECTS and ENGINEERS, P.A.
NORTH CAROLINA – Architecture # 51202, Engineering # C-2136
HASKELL
The Haskell Company
111 Riverside Avenue
Jacksonville, Florida 32202
Phone # (904) 791-4500

MARINE CORPS AIR STATION CHERRY POINT

RECREATIONAL VEHICLE PARK

CHERRY POINT, NORTH CAROLINA

DATE	ISSUE/REVISION
06/11/12	FINAL_CD
06/04/12	CI
04/02/12	OPT.2_95%
08/29/11	RPI
07/01/11	PR

We hereby expressly reserve the property rights to this drawing and it is not to be reproduced, copied in any format or manner whatsoever without first obtaining our express written permission and consent.

DRAWN BY: DMC
CHECKED BY: JLW

AE JOB NUMBER
6601490

ELECTRICAL SCHEDULES

E-602
SHEET NUMBER

RECREATION VEHICLE PARK CHERRY POINT BATH HOUSE PATCH PANEL				
OUTLET IDENTIFIER	PATCH PANEL	PORT NUMBER	ROOM NUMBER	
101A1	1	1		101
102A1	1	2		103
EXTA1	1	3		EXTERIOR
EXTA2	1	4		EXTERIOR
EXTA3	1	5		EXTERIOR
EXTA4	1	6		EXTERIOR
	1	7		
	1	8		
	1	9		
	1	10		
	1	11		
	1	12		
	1	13		
	1	14		
	1	15		
	1	16		
	1	17		
	1	18		
	1	19		
	1	20		
	1	21		
	1	22		
	1	23		
	1	24		

RECREATION VEHICLE PARK CHERRY POINT CHECK-IN OFFICE PATCH PANEL				
OUTLET IDENTIFIE	PATCH PANEL	PORT NUMBER	ROOM NUMBER	
315A1	1	1		315
315A2	1	2		315
315A3	1	3		315
315A4	1	4		315
315B1	1	5		315
315B2	1	6		315
315B3	1	7		315
315B4	1	8		315
	1	9		
	1	10		
	1	11		
	1	12		
	1	13		
	1	14		
	1	15		
	1	16		
	1	17		
	1	18		
	1	19		
	1	20		
	1	21		
	1	22		
	1	23		
	1	24		

PANELBOARD LB SCHEDULE

100 A BUS W/ 100A MAIN CIR BKR, 208Y/120 VOLT, 3 PHASE, 4 WIRE, 10 KAIC MINIMUM, SURFACE MOUNT

LOAD SERVED	LOAD (AMPS) ØA	ØB	ØC	BREAKER TRIP / P	WIRE SIZE	CKT NO	PHASE A B C	CKT NO	WIRE SIZE	BREAKER TRIP / P	LOAD (AMPS) ØA	ØB	ØC	LOAD SERVED
COMPUTER	10.0			20 / 1	#12	1		2	#12	20 / 1	4.0			LIGHTING
RECEPTACLES		9.0		20 / 1	#12	3		4	#12	20 / 1		4.9		EXTERIOR LIGHTING
RECEPTACLES			1.5	20 / 1	#12	5		6	#10	20 / 1			5.0	GROUND SIGN
RECEPTACLES	7.5			20 / 1	#12	7		8						
EWH-1		20.0		30 / 2	#10	9		10						
			20.0			11		12						
EF-3	0.6			15 / 1	#12	13		14						
COMM. CABINET		10.0		20 / 1	#12	15		16						
FACP <1>			6.0	20 / 1	#12	17		18						
HAND DRYER	16.0			20 / 1	#12	19		20		20 / 1				SPARE
DCU-4		10.6		15 / 2	#12	21		22		20 / 1				SPARE
			10.6			23		24		20 / 1				SPARE
DCU-5	10.6			15 / 2	#12	25		26						PREPARED SPACE
		10.6				27		28						PREPARED SPACE
						29		30						PREPARED SPACE
TOTAL	44.7	60.2	38.1								4.0	4.9	5.0	TOTAL

TOTAL CONNECTED AMPS: 48.7 ØA 65.1 ØB 43.1 ØC TOTAL CODE LOAD: 19.1 KVA 53.0 AMPS

NOTES

PROVIDE SERVICE ENTRANCE LABEL.

<1> PROVIDE A MECHANICAL LOCK-ON DEVICE WITH A RED EXPOSED FINISH AND A LABEL ON THE METAL PANEL BOARD ADJACENT TO ANY BREAKER THAT SUPPLIES ELECTRICAL POWER TO THE FIRE ALARM PANEL(S). ALSO PROVIDE THE PANEL NUMBER AND CIRCUIT BREAKER NUMBER ON THE FIRE ALARM PANEL.

-

-

MECHANICAL EQUIPMENT CONNECTION SCHEDULE

ID	DESCRIPTION	LOAD HP	KW	AMPS	VOLTAGE	PHASE	PANEL BY DIV 26	CIRCUIT NUMBER BY DIV 26	LOCAL DISCONNECT BY DIV 26	STARTER SIZE BY DIV 26	WIRE & CONDUIT BY DIV 26	NOTES BY DIV 26
DAC-1	DUCTLESS AHU			1.0	208	1	SUPPLIED FROM DCU			-	3 #12, #12 GND, 3/4" C	<3> <4>
DCU-1	DUCTLESS CU			9.6	208	1	LA2	43	30/2/15	-	2 #12, #12 GND, 3/4" C	<1>
DAC-2	DUCTLESS AHU			0.8	208	1	SUPPLIED FROM DCU			-	3 #12, #12 GND, 3/4" C	<3> <4>
DCU-2	DUCTLESS CU			11.2	208	1	LA2	47	30/2/15	-	2 #12, #12 GND, 3/4" C	<1>
DAC-3	DUCTLESS AHU			1.0	208	1	SUPPLIED FROM DCU			-	3 #12, #12 GND, 3/4" C	<3> <4>
DCU-3	DUCTLESS CU			9.6	208	1	LA2	81	30/2/15	-	2 #12, #12 GND, 3/4" C	<1>
DAC-4	DUCTLESS AHU			1.0	208	1	SUPPLIED FROM DCU			-	3 #12, #12 GND, 3/4" C	<3> <4>
DCU-4	DUCTLESS CU			9.6	208	1	LB	21	30/2/15	-	2 #12, #12 GND, 3/4" C	<1>
DAC-5	DUCTLESS AHU			1.0	208	1	SUPPLIED FROM DCU			-	3 #12, #12 GND, 3/4" C	<3> <4>
DCU-5	DUCTLESS CU			9.6	208	1	LB	25	30/2/15	-	2 #12, #12 GND, 3/4" C	<1>
EF-1	EXHAUST FAN			1.5	120	1	LA2	51	T.E. SWITCH	-	2 #12, #12 GND, 3/4" C	
EF-2	EXHAUST FAN			1.5	120	1	LA2	51	T.E. SWITCH	-	2 #12, #12 GND, 3/4" C	
EF-3	EXHAUST FAN			0.6	120	1	LB	13	T.E. SWITCH	-	2 #12, #12 GND, 3/4" C	
EUH-1	ELEC. UNIT HEATER		2.25	11.2	208	1	LA2	53	T.E. SWITCH	-	2 #12, #12 GND, 3/4" C	
EUH-2	ELEC. UNIT HEATER		2.25	11.2	208	1	LA2	57	T.E. SWITCH	-	2 #12, #12 GND, 3/4" C	
EUH-3	ELEC. UNIT HEATER		2.25	11.2	208	1	LA2	61	T.E. SWITCH	-	2 #12, #12 GND, 3/4" C	
EUH-4	ELEC. UNIT HEATER		2.25	11.2	208	1	LA2	69	T.E. SWITCH	-	2 #12, #12 GND, 3/4" C	
EUH-5	ELEC. UNIT HEATER		2.25	11.2	208	1	LA2	73	T.E. SWITCH	-	2 #12, #12 GND, 3/4" C	
EUH-6	ELEC. UNIT HEATER		2.25	11.2	208	1	LA2	75	T.E. SWITCH	-	2 #12, #12 GND, 3/4" C	
EWH-1	ELECTRIC WATER HEATER		4.80	20.0	208	1	LB	9	30/2/NF	-	2 #10, #10 G, 3/4" C	
GWH-1	GAS WATER HEATER			2	120	1	LA2	65	T.E. SWITCH	-	2 #12, #12 GND, 3/4" C	

GENERAL NOTE: ALL WIRE AND CONDUIT SIZES BASED ON COPPER.

NOTES:

<1> PROVIDE NEMA 4XSS TYPE ENCLOSURE.
<2> NOT USED.
<3> CONNECT TO OUTDOOR UNIT POWER CONNECTION.
<4> PROVIDE TOGGLE SWITCH TO DISCONNECT ALL UNGROUNDED CONDUCTORS.

HASKELL ARCHITECTS and ENGINEERS, P.A.
NORTH CAROLINA – Architecture # 51202, Engineering # C–2136
HASKELL
The Haskell Company
111 Riverside Avenue
Jacksonville, Florida 32202
Phone # (904) 791-4500

MARINE CORPS AIR STATION CHERRY POINT

RECREATIONAL VEHICLE PARK

CHERRY POINT, NORTH CAROLINA

DATE	ISSUE/REVISION
06/11/12	FINAL_CD
06/04/12	CI
04/09/12	OPT.2_95%
08/29/11	RPI
07/01/11	PR

We hereby expressly reserve the property rights to this drawing and it is not to be reproduced, copied in any format or manner whatsoever without first obtaining our express written permission and consent.

DRAWN BY: DMC
CHECKED BY: JLW

AE JOB NUMBER 6601490

ELECTRICAL SCHEDULES

E-603
SHEET NUMBER

LUMINAIRE SCHEDULE - 6601300

MARK	DESCRIPTION	MOUNT	LAMP QTY	LAMP TYPE	LAMP WATTS	BALLAST V	BALLAST VA	BALLAST BF		MANUFACTURER (OR APPROVED EQUAL)	MODEL	REF. NOTES
A2	FLUORESCENT, 2'x4', 12 CELL, 3" DEEP PARABOLIC LOUVER, 4.875" HOUSING HEIGHT; LOW IRIDESCENT SPECULAR LOUVER FINISH, DIE FORMED STEEL HINGES. PAINTED AFTER FABRICATION WITH HIGH TEMPERATURE BAKED WHITE ENAMEL FINISH; UNIVERSAL VOLTAGE, PROGRAMMED RAPID START BALLAST WITH < 10% THD.	RECESSED	2	T5	28	120	64	1.03	1	COLUMBIA	P4D	
									2	LITHONIA	2PM3N	
									3	METALUX	2EP3GAX	
									4	HE WILLIAMS	HE3	
A3	FLUORESCENT, 2'x4', 18 CELL, 3" DEEP PARABOLIC LOUVER, 4.875" HOUSING HEIGHT; LOW IRIDESCENT SPECULAR LOUVER FINISH, DIE FORMED STEEL HINGES. PAINTED AFTER FABRICATION WITH HIGH TEMPERATURE BAKED WHITE ENAMEL FINISH; UNIVERSAL VOLTAGE, PROGRAMMED RAPID START BALLAST WITH < 10% THD.	RECESSED	2	T5	28	120	64	1.03	1	COLUMBIA	P4D	
									2	LITHONIA	2PM3N	
									3	METALUX	2EP3GAX	
									4	HE WILLIAMS	HE3	
B2	FLUORESCENT, 2'x4', LAY-IN TROFFER; STEEL HOUSING, FLUSH STEEL DOOR WITH MECHANICAL SEAL AND POSITIVE ACTION LATCHES; SNAP IN BALLAST COVERS, ACRYLIC LENS, A-12 PATTERN, 0.125" NOMINAL THICKNESS; PAINTED AFTER FABRICATION WITH HIGH REFLECTIVITY BAKED WHITE ENAMEL FINISH; UNIVERSAL VOLTAGE, PROGRAMMED RAPID START BALLAST WITH < 10% THD.	RECESSED	2	T5	28	120	64	1.03	1	COLUMBIA	4PS	
									2	LITHONIA	SP8	
									3	METALUX	GC8	
									4	HE WILLIAMS	50	
C1	FLUORESCENT, 2', ACRYLIC LENS, A-12 PATTERN, 0.125" NOMINAL THICKNESS, CONSTRUCTED WITH 20 GAUGE STEEL, PAINTED AFTER FABRICATION WITH HIGH REFLECTIVITY BAKED WHITE ENAMEL FINISH; UNIVERSAL VOLTAGE PROGRAMMED RAPID START BALLAST WITH < 10% THD.	WALL	2	T8	17	120	66	0.98	1	COLUMBIA	SA	1
									2	LITHONIA	W	
									3	HE WILLIAMS	29	
									4			
D1	FLUORESCENT, OPEN DOWNLIGHT, 6" REFLECTOR - SELF TRIM, ALUMINUM ALZAK; UNIVERSAL ADJUSTABLE MOUNTING BRACKET; UNIVERSAL VOLTAGE, ELECTRONIC BALLAST WITH < 10% THD.	RECESSED	1	PLT	32	120	36	0.98	1	PRESCOLITE	LF6CFV	
									2	GOTHAM	AFV	
									3	PORTFOLIO	C60	
									4	HE WILLIAMS	PV60	
D2	METAL HALIDE, OPEN DOWNLIGHT, 6" REFLECTOR - SELF TRIM, ALUMINUM ALZAK; UNIVERSAL ADJUSTABLE MOUNTING BRACKET; UNIVERSAL VOLTAGE, ELECTRONIC BALLAST WITH < 10% THD.	RECESSED	1	PSMH	50	277	194	1.00	1	PRESCOLITE	LF8MH	
									2	GOTHAM	AH	
									3			
									4			
F2	FLUORESCENT, 1'x4', 10% UPLIGHT, HEAVY DUTY, STEEL HOUSING, WIRE GUARD, PAINTED AFTER FABRICATION WITH WHITE POWER COAT FINISH; UNIVERSAL VOLTAGE, PROGRAMMED RAPID START BALLAST WITH < 10% THD.	CEILING/ SUSPENDED	2	T5	28	120	64	1.03	1	COLUMBIA	IC	
									2	LITHONIA	AF	
									3	METALUX	DIM	
									4	HE WILLIAMS	83	
R1	OUTDOOR CUTOFF ROADWAY LUMINAIRE HOUSING - LOW PROFILE HEIGHT, PADDLE SHAPE, ONE-PIECE DIE-CAST, LOW COPPER ALUMINUM ALLOY; DISTRIBUTION - TYPE II, FULL CUTOFF, SEALED OPTIC CHAMBER; 6000K LAMPS; MOUNT - HORIZONTAL TENON.	POLE	100	LED	1	120	117	1.00	1	BETALED	STR-LWY	
									2			2, 3, 4, 5
									3			
									4			
W1	METAL HALIDE, FULL CUT-OFF, HALF ROUND SHAPED CAST ALUMINUM HOUSING WITH FLAT TEMPERED GLASS LENS, WET LOCATION, MEDIUM THROW DISTRIBUTION WITH 10% UPLIGHT.	WALL	1	PSMH	50	120	60	1.00	1	SECURITY LIGHTING	RWS	
									2	LITHONIA	WSR	5
									3	LUMARK	IP	
									4	HE WILLIAMS	WPHP	
X1	LED EXIT SIGN, RED LETTERING, STENCIL FACE, THERMOPLASTIC WHITE HOUSING.	UNIVERSAL	1	LED	< 5 PER FACE	120	17		1	DUALITE	LX	
									2	LITHONIA	LQM	
									3	SURE-LITES	LPX	
									4	MCPHILBEN	CXX	

GENERAL NOTES:

1. SEE ARCHITECTURAL PLANS FOR CEILING TYPE.
2. LUMINAIRE VOLTAGE IS THE SAME AS CIRCUIT HOMERUN.
3. "E" SUFFIX ON LUMINAIRE DESIGNATION INDICATES LUMINAIRE WITH FACTORY INSTALLED EMERGENCY LIGHTING UNIT RATED AT 1100 LUMEN.
4. "D" SUFFIX ON LUMINAIRE DESIGNATION INDICATES LUTRON HI-LUME DIMMING BALLAST TO BE PROVIDED.
5. "F" SUFFIX ON LUMINAIRE DESIGNATION INDICATES FLANGE MOUNTING KIT TO BE PROVIDED.
6. PROVIDE ALL FLUORESCENT LAMPS WITH PROGRAMMED RAPID START BALLAST.
7. LUMINARIES AND ALL ASSOCIATED EQUIPMENT SHALL MEET SEISMIC REQUIREMENTS FOR PROJECT LOCATION.

REFERENCE NOTES:

1. PROVIDE OPTION LCO (LESS CONVENIENCE OUTLET).
2. PROVIDE 20' SQUARE STRAIGHT ALUMINUM POLE, COLOR TO MATCH LUMINAIRE.
3. PROVIDE "NORTH CAROLINA" ENGINEER'S SIGNED AND SEALED POLE FOUNDATION DESIGN CALCULATIONS FOR THE IMPORTANCE FACTOR AND WIND GUST RATING OF THE PROJECT SITE.
4. POLE BASE DIAMETER SHALL BE CALCULATED WITH THE EPA OF THE SPECIFIED LUMINAIRE.
5. COORDINATE COLOR SELECTION OF MOUNTING DEVICE AND LUMINAIRE HOUSING WITH ARCHITECT.

HASKELL ARCHITECTS and ENGINEERS, P.A.
NORTH CAROLINA – Architecture # 51202, Engineering # C-2136
HASKELL
The Haskell Company
111 Riverside Avenue
Jacksonville, Florida 32202
Phone # (904) 791-4500

MARINE CORPS AIR STATION CHERRY POINT

RECREATIONAL VEHICLE PARK

CHERRY POINT, NORTH CAROLINA

DATE	ISSUE/REVISION
06/11/12	FINAL_CD
06/04/12	CI
04/09/12	OPT.2_95%
08/29/11	RPI
07/01/11	PR

We hereby expressly reserve the property rights to this drawing and it is not to be reproduced, copied in any format or manner whatsoever without first obtaining our express written permission and consent.

DRAWN BY: DMC
CHECKED BY: JLW

AE JOB NUMBER
6601490

ELECTRICAL SCHEDULES

E-604
SHEET NUMBER

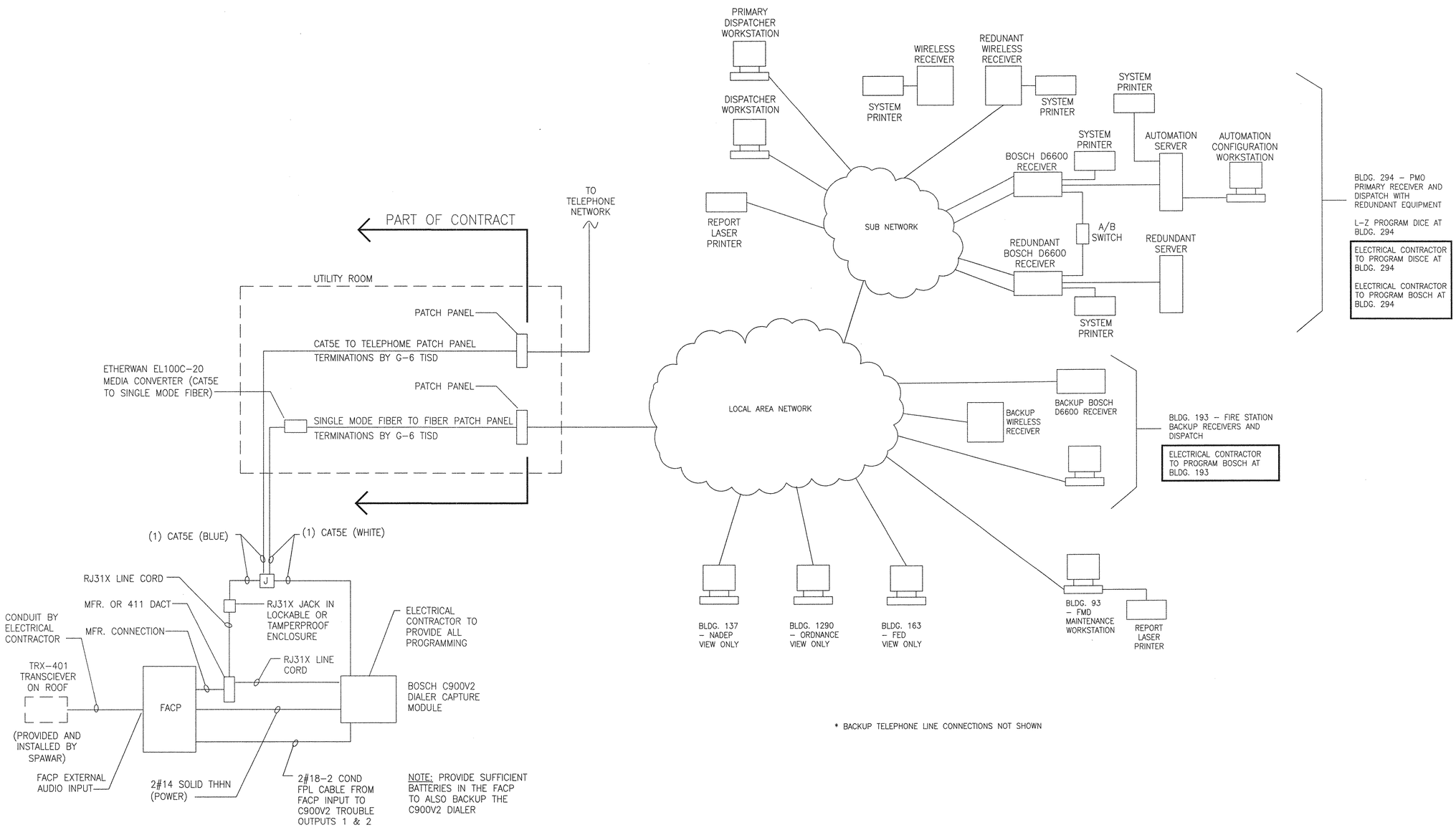

MCAS CHERRY POINT BASEWIDE FIRE ALARM REPORTING SYSTEM RISER

HASKELL ARCHITECTS and ENGINEERS, P.A.
NORTH CAROLINA – Architecture # 51202, Engineering # C-2136
HASKELL
The Haskell Company
111 Riverside Avenue
Jacksonville, Florida 32202
Phone # (904) 791-4500

MARINE CORPS AIR STATION CHERRY POINT

RECREATIONAL VEHICLE PARK

CHERRY POINT, NORTH CAROLINA

DATE	ISSUE/REVISION
06/11/12	FINAL_CD
06/04/12	CI
04/09/12	OPT.2_95%

We hereby expressly reserve the property rights to this drawing and it is not to be reproduced, copied in any format or manner whatsoever without first obtaining our express written permission and consent.

DRAWN BY: DMC
CHECKED BY: JLW

AE JOB NUMBER 6601490

FIRE ALARM REPORTING SYSTEM RISER

E-605
SHEET NUMBER