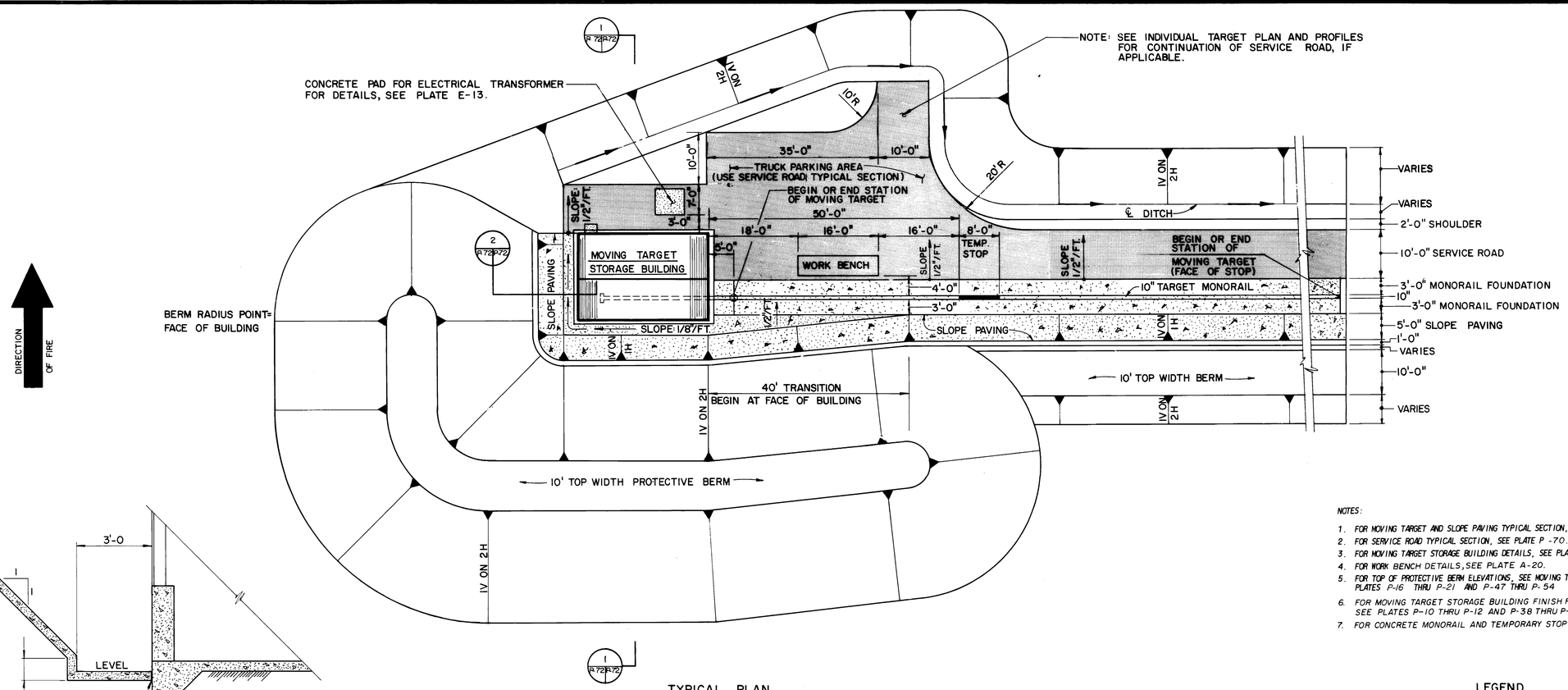

TYPICAL PLAN
SCALE: 1"= 10'-0"

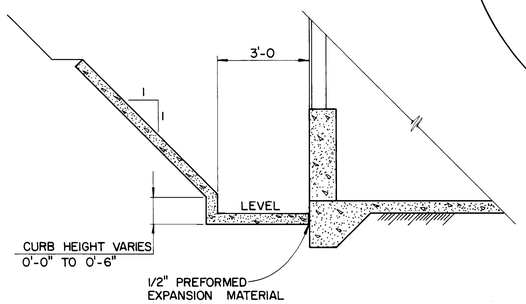

SECTION
SCALE: 1"= 2'-0"
2 P-72 P-72

NOTES:

1. FOR MOVING TARGET AND SLOPE PAVING TYPICAL SECTION, SEE PLATE P-71
2. FOR SERVICE ROAD TYPICAL SECTION, SEE PLATE P-70.
3. FOR MOVING TARGET STORAGE BUILDING DETAILS, SEE PLATE A-19.
4. FOR WORK BENCH DETAILS, SEE PLATE A-20.
5. FOR TOP OF PROTECTIVE BERM ELEVATIONS, SEE MOVING TARGET PLAN AND PROFILES, PLATES P-16 THRU P-21 AND P-47 THRU P-54
6. FOR MOVING TARGET STORAGE BUILDING FINISH FLOOR ELEVATIONS, SEE PLATES P-10 THRU P-12 AND P-38 THRU P-41.
7. FOR CONCRETE MONORAIL AND TEMPORARY STOP DETAILS, SEE PLATE S-1.

LEGEND

SERVICE ROAD

CONCRETE

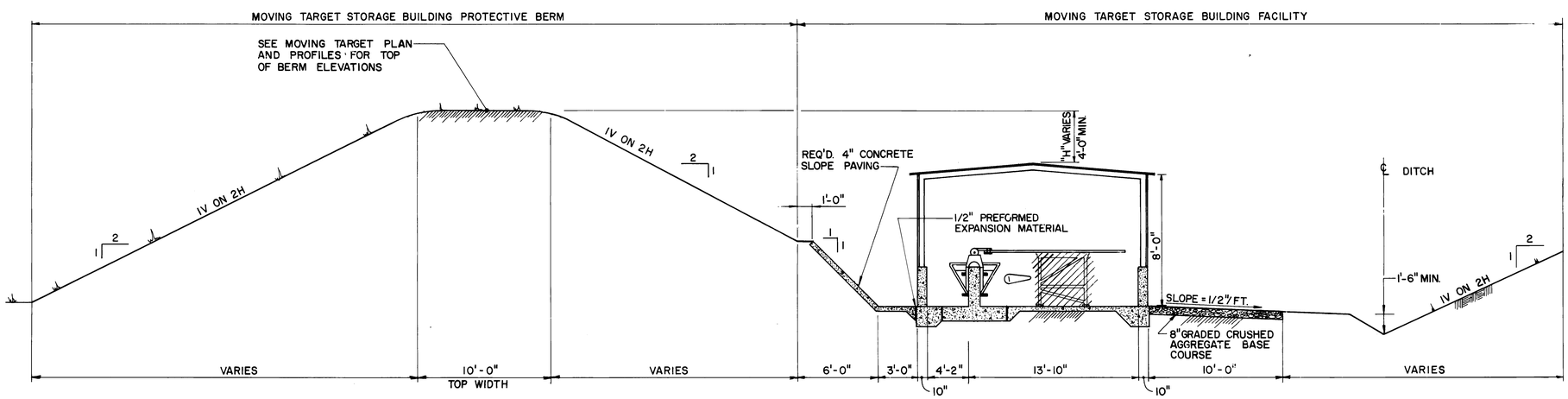

SECTION
SCALE: 1"= 4'-0"
1 P-72 P-72

SCALE: 1"=4'
4' 0 4'

SCALE: 1"=10'
10' 0 10'

SYMBOL	ZONE	DESCRIPTION	DATE	BY
1			21 MAY 85	JRB

REVISIONS

PRYBYLOWSKI AND GRAVINO, INC. ENGINEERS
ATLANTA GEORGIA

U. S. ARMY ENGINEER DISTRICT, SAVANNAH CORPS OF ENGINEERS SAVANNAH, GEORGIA

INFANTRY FIGHTING VEHICLE (IFV) RANGES

MOVING TARGET STORAGE BUILDING TYPICAL SECTION

FT. BENNING GEORGIA

SIZE	INVITATION NO.	DRAWING NO.	PLATE
F	DACA 21-83-B-0020	84-02-04	P-72

SCALE: AS NOTED SHEET 74

74

SAY 12743

FORMAT 6

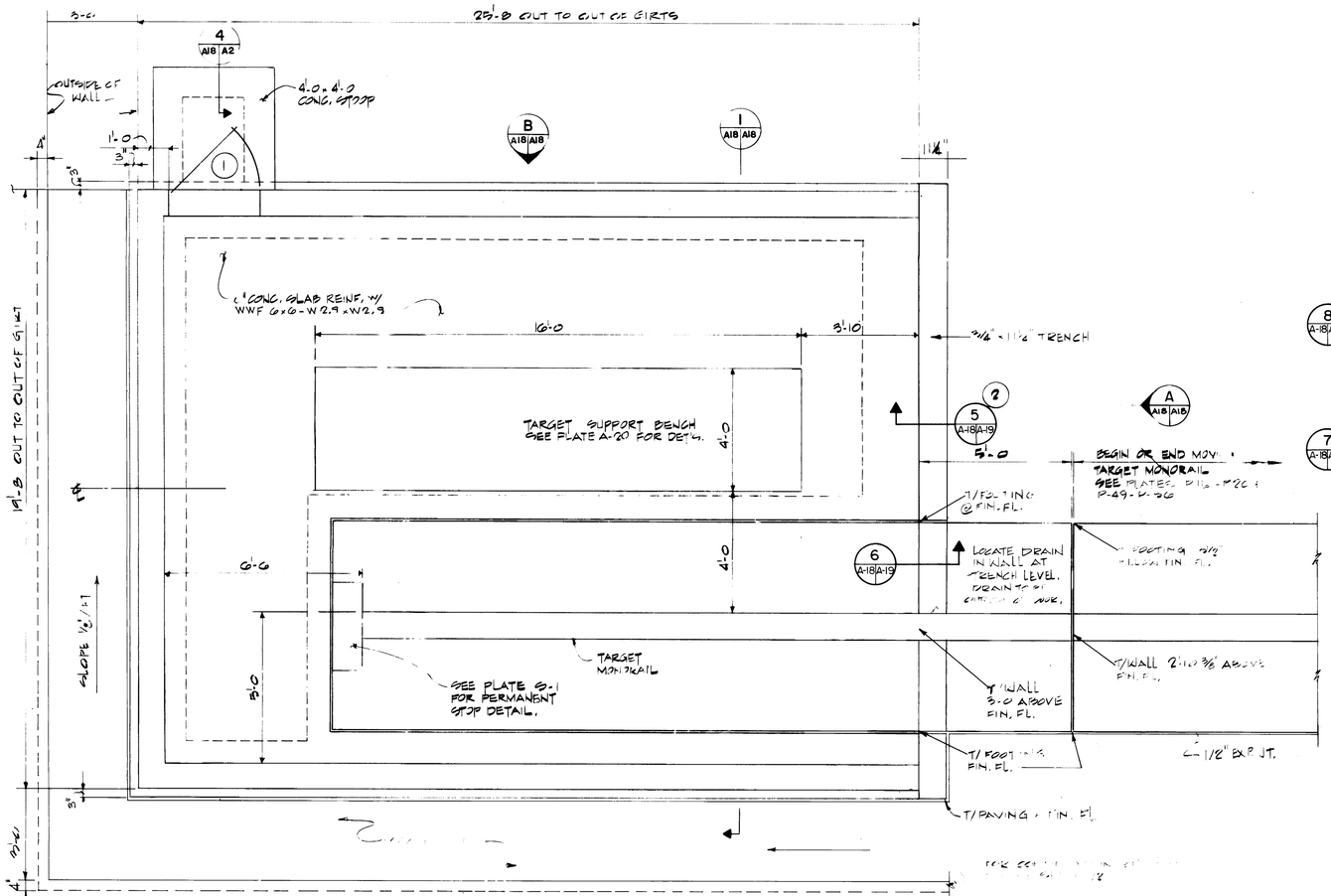

FLOOR PLAN
SCALE: 1/2" = 1'-0"

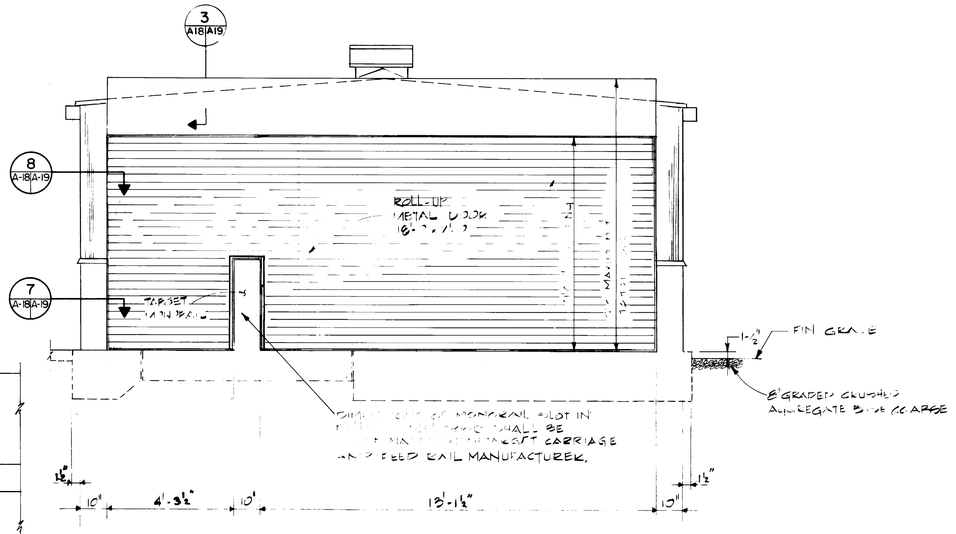

ELEVATION
SCALE: 1/2" = 1'-0

NOTES 1. FOR BUILDING ORIENTATION, SEE MOVING TARGET PLAN AND PROFILES, PLATES P-16 THRU P-20 AND P-49 THRU P-50.

2. USE 3/4" CHAMFER AT ALL EXPOSED EDGES OF CONCRETE.

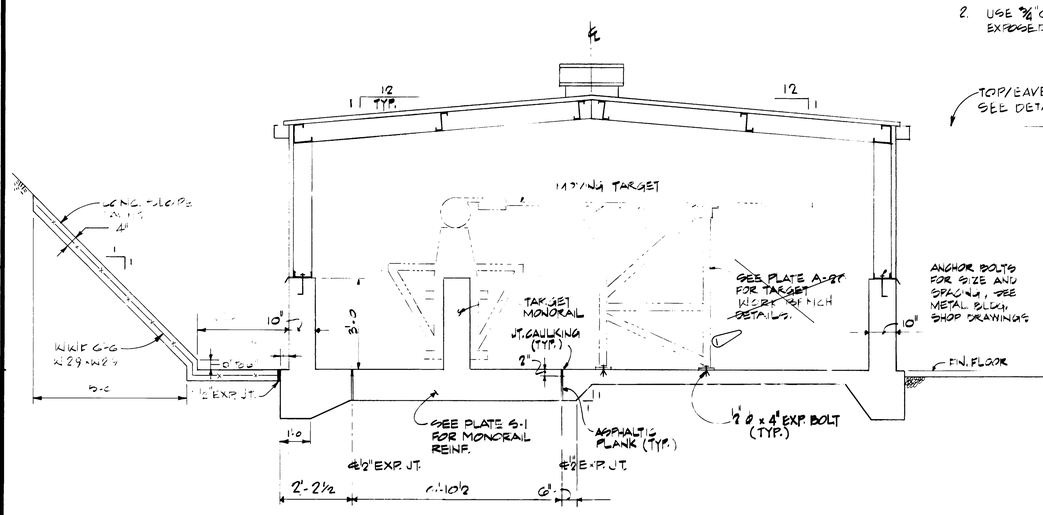

SECTION
SCALE: 1/2" = 1'-0

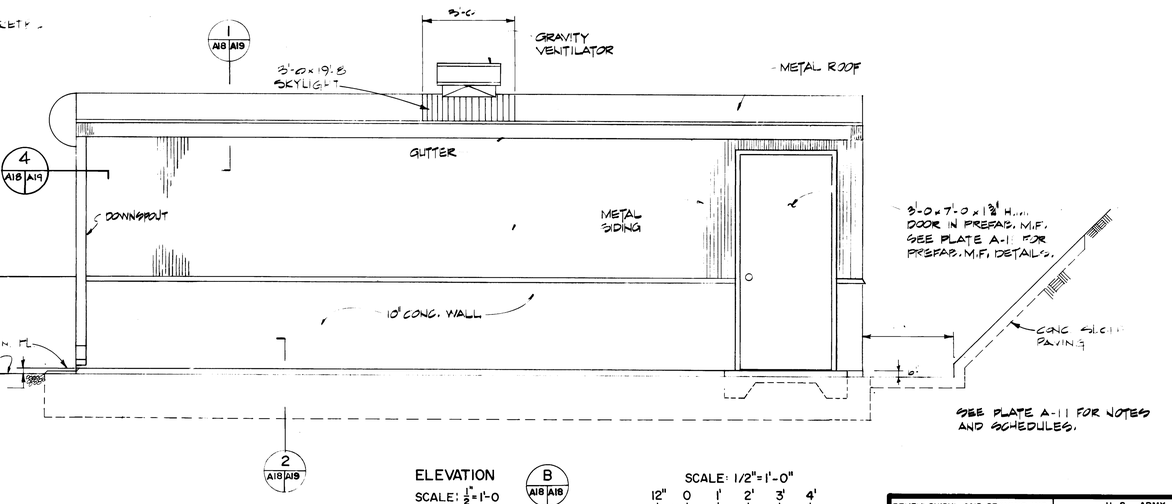

ELEVATION
SCALE: 1/2" = 1'-0

SCALE: 1/2" = 1'-0"
12" 0 1' 2' 3' 4'
GRAPHIC SCALE

SYMBOL	ZONE	DESCRIPTION	DATE	BY
1		REVISED	21 MAY 85	JBG

REVISIONS

PRYBYLOWSKI AND GRAVINO, INC. ENGINEERS
ATLANTA GEORGIA

U. S. ARMY ENGINEER DISTRICT, SAVANNAH
CORPS OF ENGINEERS
SAVANNAH, GEORGIA

INFANTRY FIGHTING VEHICLE (IFV) RANGES
MOVING TARGET STORAGE BLDG.
PLAN AND ELEVATIONS
FT. BENNING GEORGIA

SIZE	INVITATION NO.	DRAWING NO.	PLATE
F	DACA21-83-B-0020	84-02-04	A-18

SCALE: AS NOTED
SHEET 104

104

SAY 12773

FORMAT 6

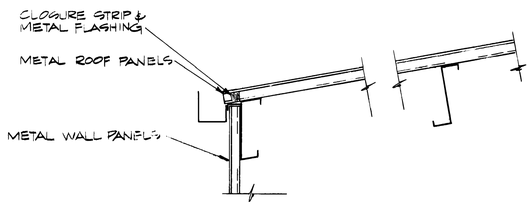

TYPICAL AT EAVE

SECTION 1 A18 A19
SCALE: 1 1/2" = 1'-0"

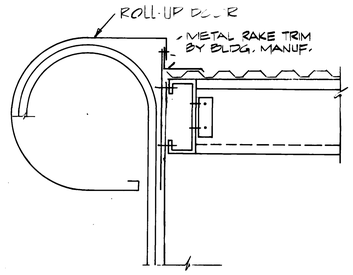

TYPICAL AT RAKE

SECTION 3 A18 A19
SCALE: 1 1/2" = 1'-0"

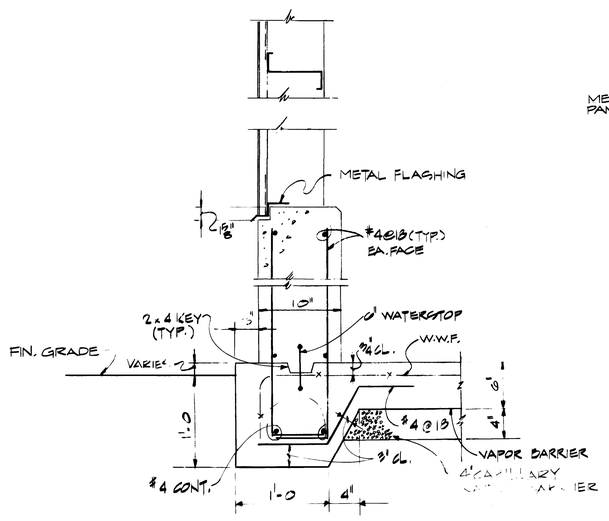

TYPICAL AT PAGE

SECTION 2 A18 A19
SCALE: 1 1/2" = 1'-0"

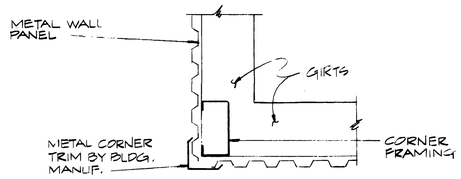

TYPICAL AT CORNER

DETAIL 4 A18 A19
SCALE: 1 1/2" = 1'-0"

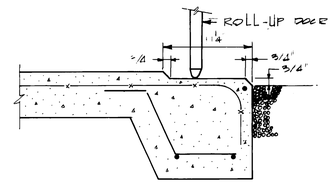

SECTION 5 A18 A19
SCALE: 1 1/2" = 1'-0"

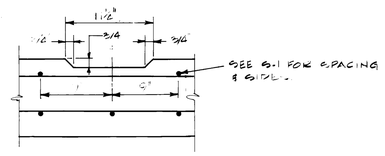

SECTION 6 A18 A19
SCALE: 1 1/2" = 1'-0"

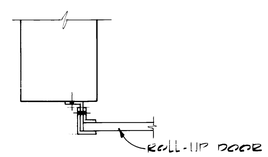

SCALE: 1 1/2" = 1'-0"
7 A18 A19

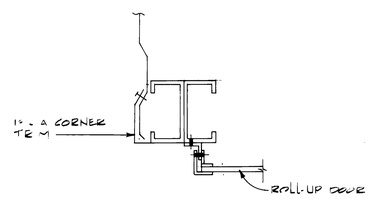

SCALE: 1 1/2" = 1'-0"
8 A18 A19

NOTES:

1. DESIGN SHALL BE GOVERED BY PROVISIONS OF STANDARD BUILDING CODE LATEST EDITION.
2. DESIGN LOADS
   ROOF LIVE LOAD = 20 P.S.F.
   BASIC WIND SPEED = 80 MPH
   PLUS 1.5 SAFTY FACTOR AGAINST UPLIFT
   SEISMIC ZONE: 1, Z = .075; K = 1; C = .10
   50 YR. RECURRENCE INTERVAL EXPOSURE C
3. PRE-ENGINEERED BUILDING FABRICATOR SHALL SUBMIT FOR APPROVAL A COMPLETE DESIGN ANALYSIS SHOWING COMPLETE CALCULATIONS ALONG WITH THE SHOP DRAWINGS. PE. CERTIFIED COMPUTER CALCULATIONS ALSO ACCEPTABLE.
4. THE STRUCTURE SHALL BE DESIGNED AND FABRICATED ACCORDING TO THE AISC, AISI, AWS, & MBMA LATEST SPECIFICATIONS.
5. THE SHOP DRAWINGS SHALL INCLUDE DETAILS OF ALL MAIN MEMBERS, TYPICAL CONNECTIONS SHOWING BOLT HOLES & WELDS & ERECTION DRAWING, ALSO A LAYOUT OF ANCHOR BOLTS.
6. ALL FIELD CONNECTIONS SHALL BE BOLTED. ALL STEEL PARTS TO BE GALVANIZED UNLESS OTHERWISE NOTED.
7. PROVIDE GROUNDING FOR FRAMING AND METAL BUILDING AS PER MANUFACTURERS RECOMMENDATIONS.
8. BUILDING DIMENSIONS SHOWN ARE MINIMUM REQUIRED CONTRACTOR MAY INCREASE DIMENSIONS TO SUIT ACTIAL PREFAB BUILDING REQUIREMENTS.
9. FOR ADDITIONAL STRUCTURAL NOTES SEE PLATE S-1.

BUILDING SCHEDULE

AREA	NR. REQ'D.
PLAT. QUAL. / MULTI-PURPOSE RANGE (TURRENTINE)	8
MULTIPURPOSE RANGE (CARMOUCHE)	5
TOTAL:	13

DOOR SCHEDULE

DOOR NR.	FRAME	SIZE	HARDWARE SET NUMBER	[illegible]	REMARKS
1	PMF	3'-0 x 7'-0 x 1 3/8"	1	YES	[illegible] AND FRAME TO BE [illegible]
2	GALV. STEEL	15'-0 x 7'-0	—	—	[illegible]

NOTE:
THE PLATOON QUALIFICATION / MULTIPURPOSE RANGE, TURRENTINE, HAS BEEN RENAMED HASTINGS RANGE.

SCALE: 1-1/2" = 1'-0"
12" 6" 0 1' 2'
GRAPHIC SCALE

SYMBOL	ZONE	DESCRIPTION	DATE	BY
			21 MAR 85	MMD

REVISIONS

PRYBYLOWSKI AND GRAVINO, INC. ENGINEERS
ATLANTA GEORGIA

U. S. ARMY
ENGINEER DISTRICT, SAVANNAH
CORPS OF ENGINEERS
SAVANNAH, GEORGIA

INFANTRY FIGHTING VEHICLE (IFV) RANGES
MOVING TARGET STORAGE BLDG.
DETAILS

FT. BENNING GEORGIA

SIZE	INVITATION NO.	DRAWING NO.	PLATE
F	DACA21-83-B-0020	84-02-04	A-19

SCALE-AS NOTED SHEET 105

105

SAV 12774

FORMAT 6